NEW YORK UNIVERSITY
COURANT INSTITUTE - LIBRARY

# Courant Institute of Mathematical Sciences

## MAGNETO-FLUID DYNAMICS DIVISION

MF-43 AFOSR 65-0276

A Uniformly Valid Asymptotic Theory of Rarified Gas Flows Under the Nearly Free-Molecule Conditions

by

Young-ping Pao

December 18, 1964

NEW YORK UNIVERSITY

Magneto-Fluid Dynamics Division
Courant Institute of Mathematical Sciences
New York University

MF-43 AFOSR 65-0276

# A Uniformly Valid Asymptotic Theory of Rarified Gas Flows Under the Nearly Free-Molecule Conditions

by

Young-ping Pao

December 18, 1964

Air Force Office of Scientific Research

Grant No. AF-AFOSR-62-266

NEW YORK UNIVERSITY
COURANT INSTITUTE - LIBRARY

9297

ABSTRACT

For the flow of a rarefied gas of infinite extent past an immersed body at large Knudsen number, the description of the flow field by the free-molecule solution is only valid in the inner region, a region within a distance much larger than the body dimension but much less than a mean free path away from the body. Outside of this region the collisional effects cannot be considered as a perturbation even in the lowest order approximation. To secure a systematic method of obtaining high order collisional corrections, it would be necessary to treat adequately the outer region, the flow field outside the inner region. For this purpose an asymptotic theory for obtaining nearly free-molecule solutions which are uniformly valid throughout the flow field is proposed in the present study for the linearized Boltzmann equation with hard-sphere molecules. Power-law molecules can be treated in a like manner. The theory is based on a new integral formulation of the linearized Boltzmann equation. An inner-and-outer-expansion procedure is used. The simplification in the inner region is that the collisional effects are only secondary while outside of the inner region the angle subtended by the body is small so that the flow field is essentially that created by a source at the origin. The form of the source term is determined by the free-

molecule solution to the problem. The nature of the flow field in the outer region varies from being free-molecule to collision-cominated. The effects of the lowest order outer solution on the inner solutions are of order $1/K_n$ in two-dimensional problems and of order $1/K_n^2$ in three-dimensional problems.

For the aerodynamic drag, it is found that for two-dimensional problems

$$D \cong D_{f.M.} + \alpha(\ell n \frac{1}{\alpha})D_1 + \alpha D_2$$

and for three-dimensional problems,

$$D \cong D_{f.M} + \alpha D_1 + (\alpha^2 \ell n \frac{1}{\alpha})D_2 + \alpha^2 D_3 .$$

In two-dimensional cases, $D_1$ can be calculated by integral iteration, and $D_2$ is partially due to the effects of the lowest order outer solution. For three-dimensional problems, $D_3$ is partially due to the effects of the lowest order outer solution while $D_1$ and $D_2$ can be calculated by the integral iteration.

In order to examine the mathematical nature of this asymptotic theory, a simple problem of a two-dimensional circular cylinder rotating in a rarefied gas, which is at rest at infinity, is studied. The theory is applied to this problem, using a model equation. It is proved that

the inner and outer solutions obtained by the theory are indeed asymptotic to the true solution throughout the physical space.

Table of Contents


Abstract i

I. INTRODUCTION

I.1. Aerodynamics of Rarefied Gas Flows 1

I.2. Collisional Effects and Nonuniform Validity of Free-molecule Solutions 2

I.3. Purpose of the Present Study 4

II. BOUNDARY VALUE PROBLEMS FOR THE LINEARIZED BOLTZMANN EQUATION

II.1. Boltzmann Equation in Orthogonal Curvilinear Coordinates 7

II.2. Boundary Conditions 12

II.3. Boundary Value Problems and Integral Equations 15

III. A UNIFORMLY VALID ASYMPTOTIC THEORY

III.1. Approximate Solutions and Asymptotic Expansions 25

III.2. Nearly Free-molecule Flows 29

III.3. Outer Solutions 34

III.4. Inner Solutions 44

III.5. Aerodynamic Forces 49

III.6. Question of a Mathematical Foundation 52

IV. THE CYLINDER PROBLEM--ASYMPTOTIC THEORY

IV.1. The BGKW Model Equation 55

IV.2. Formulation of the Problem 58

IV.3. Outer Solutions 62

IV.4. Inner Solutions 66

V. THE CYLINDER PROBLEM--MATHEMATICAL FOUNDATION

V.1. Introduction 72

V.2. The Uniqueness Theorem

V.3. The Existence Theorem and the Theorem of Continuous Dependence 75

V.4. The Outer Solutions 82

V.5. Uniformly Valid Asymptoticity 85

VI. DISCUSSION

VI.1. The Asymptotic Theory 87

VI.2. Drag 87

VI.3. The Lowest Outer Ordering 89

VI.4. Three-dimensional Problems 90

VI.5. Non-linear Problems 91

Appendices (I-VI) 93

References 122

Figures (1-4) 124

ACKNOWLEDGEMENTS

The major part of this work was carried out at Gas Dynamics Laboratory, Princeton University under Contract AF 49(638)-1271 with the U. S. Air Force Office of Scientific Research of the Office of Aerospace Research. It was completed at the Courant Institute of Mathematical Sciences, New York University under Grant AF-AFOSR-62-266 with the Air Force Office of Scientific Research.

The author is grateful to Professor D. R. Willis of the University of California, Berkeley for the suggestion of the problem and many discussions. The author wishes to express his gratitude to Professor M. D. Kruskal for many helpful suggestions and stimulating discussions, and to Professor W. D. Hayes for his advice and comments. The author also likes to thank Dr. M. Gilmartin for some helpful discussions.

# I. Introduction

## I.1. Aerodynamics of Rarefied Gas Flows

For a gas flow, when the mean free path $\lambda$ of the gas is not negligibly small in comparison with the characteristic length of the problem, the Navier-Stokes stress vs. rate-of-strain relations and the Fourier heat flux law no longer are valid. Consequently, the Navier-Stokes equations of gas dynamics have to be abandoned in favor of a kinetic theory treatment. The experimental results on the low pressure gas flows through tubes obtained by Knudsen (1909) and Gaede (1913) clearly demonstrated this failure of the Navier-Stokes equations. The length L of the problem may be taken to be, for example, the characteristic dimension of the body present in the flow, the boundary layer thickness, or the thickness of a shock wave; its choice depends on the aspects of the problem that is of interest. A kinetic theory treatment of gas flow problems is not available in full generality because of the severe mathematical difficulties involved in constructing solutions to the Boltzmann equation, the basic equation of the kinetic theory of neutral gases. However, for a gas flow of infinite extent past an immersed body, when the characteristic dimension L of the body is very small in comparison with the mean free path $\lambda$ of the gas, i.e., when $\alpha = L/\lambda \ll 1$, one method of constructing an approximate solution to the flow problem is to neglect the interaction between the molecules

re-emitted from the body and the incident stream, cf. Epstein (1924) and Tsien (1946). The solution so obtained is called the free-molecule solution. The simplifying feature of such flow problems is that most of the molecules re-emitted from the body do not collide with the molecules in the incident stream until very far away from the body. This justifies the separate consideration for the re-emitted molecules and the molecules in the incident stream in the lowest order approximation. This type of problem is of practical interest in connection with flights at very high altitudes where the mean free path of the atmosphere is very large. The free-molecule solutions have been found in good agreement with experiments, cf. Stalder, et al. (1950).

## I.2. Collisional Effects and Nonuniform Validity of Free-molecule Solutions

A number of improvements over the free-molecule solution have been suggested in order to take into account the collisional effects, e.g. by Lunc and Lubonski (1956), Baker and Charwat (1958), and Willis (1958). Willis has transformed the Boltzmann equation into an integral equation somewhat similar to the Voterra type, and the method of solution he has proposed is an iteration procedure for this integral equation using the free-molecule solution as the zeroth iterate. Taking the Boltzmann equation as the basic framework, Willis has been

able to eliminate the unnecessary assumptions and restrictions in the previous works. Solutions that take into account the collisional effects for $L/\lambda \ll 1$ are called nearly free-molecule solutions. In essence, Willis' method reduces the procedure of finding nearly free-molecule solutions for linear as well as non-linear rarefied gas flows to quadrature computations. It is claimed that more accurate correction for collisional effect can be obtained by going to higher iterations.

However, it should be noted that the description of the flow field by the free-molecule solution is only valid in a region within a distance much larger than the body dimension L but much less than the mean free path $\lambda$ from the body. This region may be called the inner region. Outside of this region the collisional effects cannot be considered as a perturbation even in the lowest order approximation, and as a result the free-molecule solution ceases to be a proper description of the flow field. Because of this nonuniform validity of the free-molecule solution, any iteration procedure based on the free-molecule solution as the zeroth iterate will, after a certain iterative state, have to fail to give correct account for the collisional effects.

## I.3. Purpose of the Present Study

It is thus clear that a systematic method of obtaining high order corrections for the collisional effects cannot be achieved based on the free-molecule solution only, and that to arrive at such a method it is necessary to treat adequately the outside region, i.e. the part of the physical space outside of the inner region. In this connection, a question of practical importance arises as to whether the first and second iteration results for aerodynamic forces obtained by Willis' method as a higher order approximation will be affected by the nonuniform validity of the free-molecule solution.

It is the intention of the present study to give an asymptotic theory for obtaining nearly free-molecule solutions which are uniformly valid throughout the physical space and to answer the question mentioned above. This asymptotic theory is based on a new integral equation formulation for the linearized Boltzmann equation. The integral equation is Fredholm in $\underline{c}$, the molecular velocity and is derived in Chapter II. The theory essentially uses an inner and outer expansion procedure and is carried out for hard-sphere molecules in Chapter III. Power-law molecules with a finite cut-off can be treated in a like manner. In the inner region the simplification is that the collisional effects are only secondary, while in the outer region the angle subtended by

the body is very small. It is found that the outer expansions are governed by a sequence of integral equations each of which is independent of the parameter $\alpha$. In particular, the lowest order outer expansion corresponds to a flow field created by a source at the origin, the form of this source term being determined by the free-molecule solution to the problem. For 2-dimensional problems the first order inner solution is not affected by the outer flow field and therefore can be computed by Willis' integral iteration procedure. In 3-dimensional problems this is true for the first and the second order inner solutions. The effects of the outer flow field are present in the higher order inner solutions.

The expressions for the drag are found to be, for 2-dimensional flows

$$D \cong D_{f.M.} + \alpha \ \ell n(\frac{1}{\alpha})D_1 + \alpha D_2 \ ,$$

and, for 3-dimensional flows

$$D \cong D_{f.M.} + \alpha D_1 + \alpha^2 \ell n(\frac{1}{\alpha})D_2 + \alpha^2 D_3 .$$

In 2-dimensional cases, $D_1$ can be computed by Willis' integral iteration method, and this is true for $D_1$ and $D_2$ in 3-dimensional cases. To calculate the next order collisional corrections, the lowest order outer solution has to be calculated numerically.

In order to investigate the mathematical correctness of this asymptotic theory, the simple problem of a circular cylinder rotating in an infinite gas which is at rest at infinity is worked out in chapters IV and V as an illustrative example in considerable detail based on the model equation proposed by Bhatnagar et al. (1954) and Welander (1954). For this problem it can be proved with mathematical rigor that the nearly free-molecule solutions obtained by the theory are indeed uniformly valid approximate solutions to the problem.

## II. Boundary Value Problems for the Linearized Boltzmann Equation

### II.1. Boltzmann Equation in Orthogonal Curvilinear Coordinates

In an orthogonal curvilinear coordinate system $(x_1, x_2, x_3)$ with its metric tensor $g_{ij} = g_i^2 \delta_{ij}$, the dynamical state of a classical particle can be identified with 6 numbers $(x_1, x_2, x_3; \dot{x}_1, \dot{x}_2, \dot{x}_3)$ where the dot denotes total differentiation with respect to time t. The summation convention is not adopted in the present work. An alternative description of this dynamical state is $(x_1, x_2, x_3; \xi_1, \xi_2, \xi_3)$, or, in a short-hand form, $(x_i, \xi_i)$ where $\xi_i = g_i \dot{x}_i$. The state at time t of a gas consisting of monatomic molecules, considered as classical particles, is completely specified by the number of molecules having their dynamical states in the range between $(x_i; \xi_i)$ and $(x + \Delta x_i; \xi_i + \Delta \xi_i)$ at time t. The number may be denoted by $F(x_i; \xi_i; t) \Delta x_i \Delta \xi_i$ where $F(x_i; \xi_i; t)$ is called the distribution function. The change of F along a molecular trajectory is due to the collisions in the gas. This statement may be written as

$$\frac{dF}{dt} = \left.\frac{\delta F}{\delta t}\right)_{\text{coll.}}, \tag{2.1}$$

where the R.H.S. term stands symbolically for the collisional

effects on F, and may be evaluated in terms of F if the assymptions of

(1) binary collisions,

(2) molecular chaos,

(3) finite molecular cross section, and

(4) slowly varying F over a molecular dimension

are made, which will always be assumed to be the case throughout this work. Under these assumptions, equation (2.1) is the renowned Boltzmann equation.

The L.H.S. of equation (2.1) stands for the limit

$$\lim_{\delta t \to 0} \frac{F(x_i + \delta x_i;\ \xi_i + \delta\xi_i;\ t + \delta t) - F(x_i;\xi_i;t)}{\delta t}$$

taking along the molecular trajectory, i.e.,

$$\frac{dF}{dt} = \frac{\partial F}{\partial t} + \sum_{i=1}^{3} \frac{\xi_i}{g_i} \frac{\partial F}{\partial x_i} + \sum_{i=1}^{3} \dot{\xi}_i \frac{\partial F}{\partial \xi_i} .$$

The factor $\dot{\xi}_i$ must be evaluated in terms of the state variables $(x_i;\ \xi_i)$. This may be done most conveniently by using the Lagrange equations

$$\frac{d}{dt} \left(\frac{\partial L}{\partial \dot{x}_i}\right) - \frac{\partial L}{\partial x_i} = 0 ,$$

where L = T-V, T is the kinetic energy of a particle and V is its potential energy.

$$L = \left( \sum_{k=1}^{3} \frac{m}{2} \xi_k^2 \right) - V \ .$$

It then follows immediately from the Lagrange equations that

$$\frac{d\xi_i}{dt} = \frac{1}{g_i} \left[ \sum_{k=1}^{3} \frac{\xi_k}{g_k} \left( \xi_k \frac{\partial g_k}{\partial x_i} - \xi_i \frac{\partial g_i}{\partial x_k} \right) - \frac{g_i}{m} \frac{\partial V}{\partial x_i} \right]$$

On substituting this result, the Boltzmann equation becomes

$$\frac{\partial F}{\partial t} + \sum_{i=1}^{3} \frac{\xi_i}{g_i} \frac{\partial F}{\partial x_i} + \sum_{i=1}^{3} \frac{1}{g_i} \left[ \sum_{k=1}^{3} \frac{\xi_k}{g_k} \left( \xi_k \frac{\partial g_k}{\partial x_i} - \xi_i \frac{\partial g_i}{\partial x_k} \right) - \frac{g_i}{m} \frac{\partial V}{\partial x_i} \right] \frac{dF}{\partial \xi_i}$$

$$= \left. \frac{\delta F}{\delta t} \right)_{coll} \qquad (2.2)$$

This is the non-linear Boltzmann equation in orthogonal curvilinear coordinates. In the case of cylindrical coordinates, $(x_1, x_2, x_3) = (r, \theta, z)$ and $(g_1, g_2, g_3) = (1, r, 1)$. The Boltzmann equation may be written, in the absence of force field, explicitly as

$$\frac{\partial F}{\partial t} + \xi_r \frac{\partial F}{\partial r} + \frac{\xi_\theta}{r} \frac{\partial F}{\partial \theta} + \xi_z \frac{\partial F}{\partial z} + \frac{\xi_\theta^2}{r} \frac{\partial F}{\partial \xi_r} - \frac{\xi_\theta \xi_r}{r} \frac{\partial F}{\partial \xi_\theta} = \left. \frac{\delta F}{\delta t} \right)_{coll.} \qquad (2.3)$$

For gases of slight nonuniformity about an equilibrium state of number density $n_o$, temperature $T_o$ and uniform

velocity $\underline{u}_o = \underline{U}\sqrt{2RT_o}$ , it is expedient to introduce $c_i = \xi_i/\sqrt{2RT_o}$, for $i = r,\theta,z$, and the function $f(c_r,c_\theta,c_z; r,\theta,z; t)$ as a dependent variable through the relation

$$F = F_M(1 + f)$$

where $F_M = n_o\left(\frac{1}{2\pi RT_o}\right)^{3/2} \exp\left\{-(\underline{c} - \underline{U})^2\right\}$. In particular, for a uniform flow past a body, $n_o$, $T_o$ and $\underline{u}_o$ will be taken as the number density, temperature and velocity of the undisturbed flow.

On neglecting the terms quadratic in f, equation (2.3) becomes, in 2-dimensional steady-state problems,

$$c_r \frac{\partial f}{\partial r} + \frac{c_\theta}{r}\frac{\partial f}{\partial \theta} + \frac{c_\theta^2}{r}\frac{\partial f}{\partial c_r} - \frac{c_\theta c_r}{r}\frac{\partial f}{\partial c_\theta} = \alpha(\Phi - \nu f)$$

where, for hard-sphere molecules,

$$\begin{aligned}
\alpha &= n_o\sigma^2 L \\
\Phi(c;r,\theta,z) &= \iiint K(\underline{c},\underline{c}_1) f \, d^3c_1 \\
K(\underline{c},\underline{c}_1) &= K_1(\underline{c},\underline{c}_1) + K_2(\underline{c},\underline{c}_1) \\
K_1(\underline{c},\underline{c}_1) &= -\sqrt{\pi}\,|\underline{c}-\underline{c}_1| \exp\left\{-(\tilde{c}_1)^2\right\} \\
K_2(\underline{c},\underline{c}_1) &= 2\sqrt{\pi}\frac{1}{|\underline{c}-\underline{c}_1|}\exp\left\{-\frac{1}{4}|\underline{c}-\underline{c}_1|^2 - \frac{(\tilde{c}^2 - \tilde{c}_1^2)\,\tilde{\underline{c}}_1\cdot\tilde{\underline{c}}}{2|\underline{c}-\underline{c}_1|^2}\right\} \\
\nu(c) &= \sqrt{\pi}\,(\tilde{c})^{-1}\left[\tilde{c}\exp(-\tilde{c}^2) + \left(\int_0^{\tilde{c}} \exp(-x^2)\,dx\right)(2\tilde{c}^2 + 1)\right] \\
\tilde{\underline{c}} &= \underline{c} - \underline{U}\ , \quad \tilde{\underline{c}}_1 = \underline{c}_1 - \underline{U}\ .
\end{aligned} \tag{2.5}$$

where L is the characteristic length of the body used to non-dimensionalize equation (2.7), and $\alpha$ is the reciprocal of the Knudsen number. For the derivation of (2.5) and also the corresponding results for power-law molecules, cf., e.g., Grad (1963) or Waldmann (1958). The molecules described by the function f will be called the non-Maxwellian molecules and those described by the uniform Maxwellian $F_M$ will be called Maxwellian molecules.* A molecule is said to be a c-molecule if its velocity is in the range ($\underline{c}$, d$\underline{c}$); otherwise it is said to be a non-c-molecule. $\nu(\underline{c})$ is the number of collisions encountered by a c-molecule during the time interval $L/\sqrt{2RT_0}$. The local production $\Phi(c;r,\theta)$ is the <u>net</u> effect on the number of non-Maxwellian c-molecules due to (i) collisions encountered at $(r,\theta)$ by non-Maxwellian non-c-molecules and (ii) collisions encountered at $(r,\theta)$ by Maxwellian c-molecules. It should be noted that the local production $\Phi$ may take negative values because the effect of collisions of the second type is always negative and may surpass that of the first type in magnitude. The effects of the collisions of the first and the second type are represented by the actions of the kernels $K_1$ and $K_2$ respectively.

---

* This should not be confused with the usual reference of Maxwellian molecules to the inverse fifth power law molecules.

## II.2. Boundary Conditions.

Two types of boundary conditions arise in the problem of a uniform flow past an immersed body. They are the boundary condition at infinity and that at the body surface.

The boundary condition at infinity is simplfied by the use of the function $f(c;r,\theta)$ as the dependent variable and can be expressed simply as

$$\lim_{r \to \infty} f(\underline{c};r,\theta) = 0, \quad (c_r < 0). \tag{2.6}$$

That is, the incoming distribution at $\infty$ is $F_M$.

Boundary conditions of the other type are more complicated. Their formulation requires knowledge of the interaction between the gas molecules and the solid surfaces and of the condition of the surface.

If $D(r,\theta)$ is an abstract function which characterizes all the solid properties of the body surface at $(r,\theta)$, this boundary condition may be put in the following form, using the scattering probability distribution $P(\underline{c},\underline{c}_1;\ D(r,\theta))$,

$$F(\underline{c};r,\theta) = \iiint_{c_{n_1} < 0} P(\underline{c},\underline{c}_1;\ D(r,\theta))F(\underline{c}_1;r,\theta)d^3c_1 \quad \text{for} \quad c_n > 0, \tag{2.7}$$

where $c_n$ is the component of the molecular velocity in the direction of the outward-drawn normal $\underline{n}$ to the body surface

at $(r,\theta)$. And, in terms of the perturbation distribution function f, equation (2.7) becomes

$$f(\underline{c};r,\theta) = -2\underline{c}\cdot\underline{U} + e^{c^2}\iiint\limits_{c_{n_1}<0} e^{-c_1^2}(2\underline{c}_1\cdot\underline{U})P\, d^3c_1 \qquad (2.8)$$

$$+ e^{c^2}\iiint\limits_{c_{n_1}<0} e^{-c_1^2}\, f(\underline{c}_1;r,\theta)P\, d^3c_1 \ ,$$

$$\text{for} \quad c_n > 0 \ .$$

The surface condition $D(r,\theta)$ may conceivably be determined by the solid structure, the surface temperature and the degree of adsorption of the gas on the surface. The surface temperature is dictated by the conservation principles. For example, if the surface is locally adiabatic, the surface temperature must maintain a balance of energy flux carried by the incoming molecules and the re-emitted ones at the surface. The adsorption of gas on the surface will, in general, depend on the pressure exerted by the gas at the surface, if no special effort is made to control the adsorption. A theoretical consideration of all these phenomena is a very involved matter. Indeed, even if the surface is a clean crystal surface at a known temperature, a theoretical treatment will have to compute the quantum mechanical interaction between the incoming molecules and the lattice surface, which is itself a many-body problem. Thus, it would seem more reliable, at the present time, to obtain

the scattering probability distribution $P(\underline{c},\underline{c}_1;\ D(r,\theta))$ from molecular beam experiments. For a wide class of engineering surfaces, e.g., polished metal surfaces, it has been found that diffuse re-emission is a good approximation, cf. Estermann (1960). For diffuse re-emission, the distribution function of the re-emitted molecules is absolute Maxwellian at the temperature of the surface. The treatment will further be simplified by restricting it to locally adiabatic solid surfaces, in which case the constants in the re-emission distribution function are uniquely determined by the principles of conservation of energy and matter. As a result, the scattering probability distribution $P(\underline{c},\underline{c}_1;\ D(r,\theta))$ is found to be

$$P = \frac{2}{\pi}\left(3 - c^2 - c_1^2 + \frac{c^2 c_1^2}{2}\right) c_{n_1} e^{-c^2} \tag{2.9}$$

and the boundary condition becomes

$$\begin{aligned} f(\underline{c};r,\theta) = {} & -2\underline{c}\cdot\underline{U} - \frac{\sqrt{\pi}}{2}\left(1 + \frac{c^2}{2}\right) U \cos\theta_n \\ & + \frac{2}{\pi}\iiint\limits_{c_{n_1}<0} e^{-c_1^2}\, c_{n_1}\left(3 - c^2 - c_1^2 + \frac{c^2 c_1^2}{2}\right) f\, d^3c_1 \\ & \qquad\qquad \text{for } c_n > 0, \end{aligned} \tag{2.10}$$

where $\theta_n$ is the angle between $\underline{U}$ and $\underline{n}$. For the derivation of equation (2.9), see Appendix I.

## II.3. Boundary Value Problems and Integral Equations

A new integral equation formulation of the boundary value problems for the linearized Boltzmann equation will be developed in this section. This formulation is not limited to any particular values of the Knudsen number; however, it is of particular convenience for an asymptotic theory to be proposed later for nearly free-molecule flows. Only two-dinensional problems are considered here, while the treatment of three-dimensional problems can be carried out without conceptual difficulties in a similar fashion.

Consider a uniform flow, with undisturbed number density $n_o$, temperature $T_o$ and velocity $\underline{U}\sqrt{2RT_o}$, past a two-dimensional cylinder whose cross-sectional contour is convex and defined by the equation

$$r = \mathcal{R}(\theta) \tag{2.11}$$

The coordinate system $(r,\theta)$ is so taken that the piece-wise differentiable function $\mathcal{R}(\theta)$ is single-valued. The length scale in the problem is such that the maximum of $R(\theta)$ is equal to unity, i.e.,

$$\max_{0 \leqslant \theta \leqslant 2\pi} \mathcal{R}(\theta) = 1 .$$

When it is necessary to emphasize the components of $\underline{c}$,

$f(c_r, c_\theta, c_z;\ r,\theta)$ or $f(c_z, s, \phi;\ r,\theta)$ will be used instead of $f(\underline{c};r,\theta)$ where $(c_z, s, \phi)$ are the cylindrical coordinates of $\underline{c}$. The mathematical problem for this two-dimensional flow is then to find a function $f(c;r,\theta)$ satisfying the following set of equations:

$$c_1 \frac{\partial f}{\partial r} + \frac{c_\theta}{r} + \frac{c_\theta^2}{r} \frac{\partial f}{\partial c_r} - \frac{c_r c_\theta}{r} \frac{\partial f}{\partial c_\theta} = \alpha(\Phi - \nu f) \tag{2.12a}$$

$$\Phi(\underline{c};r,\theta) = \iiint k(\underline{c},\underline{c}_1) f(\underline{c}_1;r,\theta) d^3c_1 \tag{2.12b}$$

$$f(\underline{c},r,\theta) \rightarrow 0 \quad \text{as} \quad r \rightarrow \infty\ , \quad \text{for} \quad c_r < 0 \tag{2.12c}$$

$$\begin{aligned} f(\underline{c};r,\theta) = {} & -2\underline{c}\cdot\underline{U} + \frac{\sqrt{\pi}}{2}\left(1 + \frac{c^2}{2}\right) U \cos\theta_n \\ & + \frac{2}{\pi} \iiint\limits_{c_{n_1} < 0} e^{-c_1^2} c_{n_1} \left(3 - c^2 + c_1^2 + \frac{c^2 c_1^2}{2}\right) f(c_1;r,\theta) d^3c_1 \\ & \qquad \text{for } c_n > 0,\ r = \mathcal{R}(\theta). \end{aligned} \tag{2.12d}$$

In obtaining equation (2.12d), the diffuse boundary condition of locally adiabatic body surface has been used. Boundary conditions of more general type can be treated in a like manner for linearized problems.

The characteristic equations for the differential operator of equation (2.12a) are

$$\frac{dr'}{r'} = \frac{r' d\theta'}{c_\theta'} = \frac{r' dc_r'}{c_\theta'^2} = \frac{r' dc_\theta'}{c_r' c_\theta'}\ ,$$

$$dc_z' = 0 \ ,$$

or, in their integrated forms

$$c_z' = \text{const} = c_z \tag{2.13a}$$

$$c_\theta'^2 + c_r'^2 = \text{const} = s^2 \tag{2.13b}$$

$$r' c_\theta' = \text{const} = rs \sin \Phi \tag{2.13c}$$

$$\theta' = \theta + \Phi - \sin^{-1}\left(\frac{r}{r'} \sin \Phi\right) \tag{2.13d}$$

For given constants $c_z$, s, $\Phi$, r, and $\theta$ equations (2.13) define a curve in the 5-space $(\underline{c}', r', \theta')$. This curve, in fact, is a molecular trajectory passing through the point $(r,\theta)$ in the physical $(r,\theta)$-plane at an inclination $\theta+\Phi$ with the x-axis (see Fig. 1). The z-component of the molecular velocity is $c_z$ and the speed in the $(r,\theta)$-plane is s. It may be noted that equation (2.13d) applies only to an interval of a molecular trajectory along which r' varies monotonically. Along such a part of the molecular trajectory equation (2.12a) may be integrated in terms of $\Phi$, using equations (2.13) with r' as the integration variable. The resultant equation is

$$f(c_z, s, \Phi; r, \theta) = f(\underline{c}'; r', \theta')\Big|_{r'=a} e^{-\int_a^r \frac{\alpha\nu}{c_r'(t)} dt} + \alpha \int_a^r \frac{\Phi(\underline{c}'; r', \theta')}{c_r'(r')} e^{-\int_{r'}^r \frac{\alpha\nu}{c_r'(t)} dt} \tag{2.14}$$

in which $\underline{c}'$ and $\theta'$ are functions of $x$, $\phi$, $\theta$, and $r'$ as defined by (2.13).

Equation (2.14) can be made more explicit if $a$ is chosen. For this purpose, the velocity space $(c_z, s, \phi)$ at $(r, \theta)$ is divided into three regions. These regions and the choice of $a$ in each of them are:

(i) Region I, in which $\pi/2 \leq |\phi| \leq \pi$. The choice of $a$ in this region is

$$a = \infty.$$

(ii) Region II, in which the velocity vector, if reversed in direction, intersects the body at some point $(R(\theta_b), \theta_b)$. If $-\Theta_1$ and $\Theta_2$ define the boundary rays of this region, it may be characterized by $-\Theta_1 \leq \phi \leq \Theta_2$. The choice of $a$ is

$$a = R_b,$$

where $R_b = R(\theta_b)$, and $R_b$ is also a function of $\phi$, $r$, and $\theta$.

(iii) Region III, the rest of the velocity space, in which $-\pi/2 < \phi < -\Theta_1$ or $\Theta_2 < \phi < \pi/2$. The choice of $a$ in this region is

$$a = r \sin \phi.$$

The case when $\Theta_1$ or $\Theta_2$ is greater than $\pi/2$ can be handled without any essential change in the method.

With these choices of $a$, equation (2.14) becomes, in Region I

$$f(c_z, s, \phi; r, \theta) = \alpha \int_r^{\infty} \frac{r' \Phi(c_z, s, \phi'; r', \theta')}{s\sqrt{r'^2 - r^2 \sin^2\phi}} \exp\left\{-\frac{\alpha\nu}{s}\left(\sqrt{r'^2 - r^2\sin^2\phi} - r|\cos\phi|\right)\right\} dr' \quad (2.15a)$$

in Region II,

$$f(c_z, s, \phi; r, \theta) = \exp\left\{-\frac{\alpha\nu}{s}\left(r|\cos\phi| - \sqrt{R_b^2 - r^2\sin^2\phi}\right)\right\}\Bigg[-2\underline{c}\cdot\underline{u} \quad (2.15b)$$

$$+ \frac{\sqrt{\pi}}{2}\left(1 + \frac{c^2}{2}\right) u \cos\theta_n$$

$$+ \frac{2\alpha}{\pi} \iiint_{c_{n_0} < 0} d^3c_0 \left(3 + \frac{c_0^2}{2} - c^2 - c_0^2\right) \int_{R_b}^{\infty} \frac{r' \Phi(c_{z_0}, s_0, \phi'_0; r', \theta')}{\sqrt{r'^2 - R_b^2 \sin^2\phi_0}} e^{-\frac{\alpha\nu}{s}\left(r|\cos\phi| - \sqrt{R_b^2 - r^2\sin^2\phi}\right)} dr' \Bigg]$$

$$+ \alpha \int_{R_b}^{r} \frac{r' \Phi(c_z, s, \phi'; r', \theta')}{s\sqrt{r'^2 - r^2\sin^2\phi}} \exp\left\{-\frac{\alpha\nu}{s}\left(r|\cos\phi| - \sqrt{r'^2 - r^2\sin^2\phi}\right)\right\} dr',$$

and in Region III,

$$f(c_z, s, \phi; r, \theta) = \alpha \int_{r\sin|\phi|}^{r} \frac{r' \Phi(c_z, s, \phi'; r', \theta')}{s\sqrt{r'^2 - r^2\sin^2\phi}} \exp\left\{-\frac{\alpha\nu}{s}\left(r|\cos\phi| - \sqrt{r'^2 - r^2\sin^2\phi}\right)\right\} dr' \quad (2.15c)$$

$$+ \alpha \int_{r\sin|\phi|}^{\infty} \frac{r' \Phi(c_z, s, \phi'; r', \theta)}{s\sqrt{r'^2 - r^2\sin^2\phi}} \exp\left\{-\frac{\alpha\nu}{s}\left(r|\cos\phi| + \sqrt{r'^2 - r^2\sin^2\phi}\right)\right\} dr'.$$

In this region r' runs through a minimum r sin $\phi$.

For the geometry of the three regions, see Fig. 2. The physical meaning of the terms in equations (2.15) is quite clear. The non-Maxwellian c-molecules at $(r,\theta)$ can be classified into two groups, namely (i) caused by collisions at $(r,\theta)$ of molecules coming directly from the body surface and

(ii) by collisions at $(r,\theta)$ of molecules coming from a point $(r',\theta')$, on the molecular trajectory, where they suffered their last collision. In equations (2.15), the terms involving $\Phi$ represent the second group of molecules and the known functions in (2.15b) represent the first group. The exponential factors are the probabilities of a c-molecule to travel without suffering any collisions from $(r',\theta')$ to $(r,\theta)$ and the denominator in the integrals is a factor which relates the differential length $dr'$ to the corresponding differential length along the molecular trajectory.

The boundary condition (2.12c) for f at $r = \infty$ can be translated into a similar condition for $\Phi$, using expression (2.15a). For, according to the mean-value theorem in integral calculus, expression (2.15a) may be written as

$$f(\underline{c};r,\theta) = \alpha\, \Phi_{mean} \int_r^\infty \frac{\exp\left\{-\frac{\alpha\nu}{s}\left(\sqrt{r'^2 - r^2\sin^2\phi} - r\cos\phi\right)\right\}}{s\sqrt{r'^2 - r^2\sin^2\phi}}\, r'\,dr'$$

$$= \Phi_{mean} / \nu(c)$$

where $\Phi_{mean}$ is the value of $\Phi(c_z, s, \phi'; r', \theta')$ taken at some $r_{mean}$, $r \leq r_{mean} < \infty$. It then follows that (2.12c) is true if and only if

$$\lim_{r \to \infty} \Phi(\underline{c};r,\theta) = 0 \ , \quad \text{for } c_r < 0 \ .$$

In all the regions I, II, and III, $f(\underline{c};r,\theta)$ can be expressed in terms of known functions and integrals involving

$\Phi(\underline{c};r,\theta)$. Substituting these expressions into (2.12b), which defines the function $\Phi$, gives rise to a linear integral equation for $\Phi$. If the dependence of $\Phi$ on the parameter $\alpha$ is expressed explicitly, this integral equation may be written in the following short-hand form:

$$\Phi(\underline{c};r,\theta;\alpha) = \Psi(\underline{c};r,\theta;\alpha) \tag{2.16}$$

$$+ \alpha B_1[\int_{R_b}^{\infty} \Phi\, T_b dr'] + \alpha B_2[\int_{R_b}^{\infty} \Phi\, T_b dr']$$

$$+ \alpha I_1[\int_{R_b}^{r} \Phi\, T_1 dr'] + \alpha I_2[\int_{r\sin|\phi_1|}^{r} \Phi\, T_1 dr']$$

$$+ \alpha I_3[\int_{r}^{\infty} \Phi\, T_1 dr'] + \alpha I_2[\int_{r\sin|\phi_1|}^{\infty} \Phi\, T_2 dr']$$

where $\Phi$ must satisfy the condition

$$\lim_{r\to\infty} \Phi(\underline{c};r,\theta;\alpha) = 0 \quad \text{for} \quad c_r < 0 . \tag{2.17}$$

The full expressions of the function $\Psi$ and the operators B's and I's in the equation (2.16) are as follows:

$$\Psi(\underline{c};r,\theta;\alpha) = I_1\left[s_1\left\{-2\underline{c}_1\cdot\underline{U} + \frac{\sqrt{\pi}}{2}(1+c_1^2)U\cos\theta_n\right\}\exp\left\{-\frac{\nu\nu}{s}\left(r\cos\phi_1 - \sqrt{R_b^2 - r^2\sin^2\phi}\right)\right\}\right],$$

$$B_1[g] = \frac{2}{\pi}\int_{-\infty}^{\infty} dc_{z_1}\int_0^{\infty} ds_1\int_{-\Theta_1}^{\Theta_2} d\phi_1\, K(\underline{c},\underline{c}_1)\exp\left\{-c_1^2 - \frac{\nu\nu}{s}\left(r\cos\phi_1 - \sqrt{R_b^2 - r^2\sin^2\phi}\right)\right\}\iiint_{c_{n_0}<0} d^3c_0\, e^{-c_0^2} s_1(3-c_0^2)\, g ,$$

$$B_2[g] = \frac{2}{\pi}\int_{-\infty}^{\infty} dc_{z_1}\int_0^{\infty} ds_1 \int_{-\Theta_1}^{\Theta_2} d\phi_1\, K(\underline{c},\underline{c}_1)\exp\left\{-c_1^2 - \frac{\alpha\nu}{s}\left(r\cos\phi_1 - \sqrt{R_b^2 - r^2\sin^2\phi}\right)\right\} \iiint_{c_{n_0}<0} d^3c_0\, e^{-c_0^2} s_1 c_1^2\left(\frac{c_0^2}{2}-1\right) g ,$$

$$I_1[g] = \int_{-\infty}^{\infty} dc_{z_1}\int_0^{\infty} ds_1 \int_{-\Theta_1}^{\Theta_2} d\phi_1\, K(\underline{c},\underline{c}_1)\, g ,$$

$$I_2[g] = \int_{-\infty}^{\infty} dc_{z_1}\int_0^{\infty} ds_1 \left[\int_{-\pi/2}^{-\Theta_1} + \int_{\Theta_2}^{\pi/2}\right] d\phi_1\, K(\underline{c},\underline{c}_1)\, g ,$$

$$I_3[g] = \int_{-\infty}^{\infty} dc_{z_1}\int_0^{\infty} ds_1 \left[\int_{-\pi}^{-\pi/2} + \int_{\pi/2}^{\pi}\right] d\phi_1\, K(\underline{c},\underline{c}_1)\, g ,$$

$$T_1 = \frac{r'}{\sqrt{r'^2 - r^2\sin^2\phi_1}}\exp\left\{-\frac{\alpha\nu}{s_1}\left|\sqrt{r'^2 - r^2\sin^2\phi_1} - r|\cos\phi_1|\right|\right\}$$

$$T_2 = \frac{r'}{\sqrt{r'^2 - r^2\sin^2\phi_1}}\exp\left\{-\frac{\alpha\nu}{s_1}\left(\sqrt{r'^2 - r^2\sin^2\phi_1} + r|\cos\phi_1|\right)\right\}$$

$$T_b = \frac{r'}{\sqrt{r'^2 - R_b^2\sin^2\phi_1}}\exp\left\{-\frac{\alpha\nu}{s}\left(\sqrt{r'^2 - R_b^2\sin^2\phi_1} - R_b|\cos\phi_1|\right)\right\}$$

where $R_b$ is the solution to the simultaneous equations

$$R_b = \mathcal{R}(\theta_b) ,$$

$$\theta_b = \theta + \Phi_1 - \sin^{-1}\left(\frac{r}{R_b}\sin\Phi_1\right) ,$$

and in the integrands, the arguments of the function $\Phi(c_{z_i}, s_i, \Phi'; r', \theta'; \alpha)$, $i = 0,1$, are understood to be

$$\phi' = \sin^{-1}\left(\frac{r}{r'} \sin \phi_i\right)$$

$$\theta' = \theta + \phi_i - \phi'$$

Despite the complicated appearance of equation (2.16), the physical interpretation is rather apparent. On the R.H.S. of (2.16), the first three terms represent the contribution to $\Phi$ due to molecules coming directly from the body surface and the rest of the terms that due to molecules coming from their last places of collision in the gas.

The system of equations (2.12) has now been case into the system of equations (2.16) and (2.17). In other words, the mathematical problem of all the boundary value problems for the linearized Boltzmann equation is to find a function $\Phi(\underline{c};r,\theta;\alpha)$ which satisfies equation (2.16) under the condition (2.17).

It is worthwhile to point out certain features of this integral-equation formulation. In the system of equations (2.16) and (2.17) there is only one single integral equation while in the system (2.12) there are integro-differential equation and more complicated boundary conditions. Furthermore, equation (2.16) is Fredholm in $\underline{c}$; i.e., its domain of integration is independent of the molecular velocity $\underline{c}$. It is perhaps advantageous in certain problems to use $\Phi$ as the dependent variable since $\Phi$ is a continuous function. It the next chapter an asymp-

totic theory for nearly free-molecule problems can be developed, based on equations (2.16) and (2.17).

## III. A Uniformly Valid Asymptotic Theory

### III.1. Approximate Solutions and Asymptotic Expansions

A number of concepts and terms are introduced here to facilitate the asymptotic analysis to be carried out in the later sections. First, consider the equation

$$L(x, u(x,\alpha); \alpha) = 0 \quad \text{for} \quad x \in D , \tag{3.1}$$

which is assumed to define a well-posed problem with a parameter $\alpha$. By this is meant that there exists a unique solution $u(x; \alpha)$ to (3.1), uniformly bounded in D. A function $v(x; \alpha)$ is said to be

(i) an approximate solution to equation (3.1) within an absolute error $\varepsilon$ if

$$|u(x; \alpha) - v(x; \alpha)| < \varepsilon \qquad \text{for all} \quad x \in D \tag{3.2a}$$

or

(ii) an approximate solution to equation (3.1) within a relative error $\varepsilon$, if

$$|u(x; \alpha) - v(x; \alpha)| < \varepsilon|u(x; \alpha)| \quad \text{for all} \quad x \in D. \tag{3.2b}$$

For $\alpha \in (0,\alpha_0)$ and $\alpha_0 \ll 1$, approximate solutions may be constructed from knowledge of the nature of $u(x; \alpha)$ in the limit $\alpha \longrightarrow 0$. For example, suppose two sequences of functions

$\sigma_n(\alpha)$ and $u_n(x)$, $n = 0, 1, \ldots, N$, can be found such that for $k = 0, 1, \ldots, N-1$,

$$\lim_{\alpha \to 0} \frac{\sigma_{k+1}(\alpha)}{\sigma_k(\alpha)} = 0 \tag{3.3}$$

$$\lim_{\alpha \to 0} \frac{u(x;\alpha) - \sum_{n=0}^{k} \sigma_n(\alpha) u_n(x)}{\sigma_{k+1}(\alpha)} = u_{k+1}(x) \tag{3.4}$$

The functions $\sum_{n=0}^{k} \sigma_n(\alpha) u_n(x)$ are said to be

(i) a k-th order asymptotic expansion for $u(x; \alpha)$ if $u_{k+1}(x)$ is uniformly bounded in D, or

(ii) a k-th order uniformly asymptotic expansion for $u(x; \alpha)$ if $u_{k+1}(x)/u_o(x)$ is uniformly bounded in D by $M_{k+1}$.

These may be designated as $u(x; \alpha) \sim \Sigma\, \sigma_n(\alpha) u_n(x)$ for an asymptotic expansion and $u(x; \alpha) \approx \Sigma\, \sigma_n(\alpha) u_n(x)$ for a uniformly asymptotic expansion. It can be shown that indeed an asymptotic expansion for $u(x; \alpha)$ is an approximate solution to equation (3.1) within some absolute error $\varepsilon \ll 1$, and a uniformly asymptotic expansion for $u(x; \alpha)$ is an approximate solution to (3.1) within some relative error $\varepsilon \ll 1$. To do this for the asymptotic expansions is trivial. In what follows this will be verified for uniformly asymptotic expansions.

This is easily seen for $k = 0$; in fact, given $0 < \varepsilon < \frac{1}{2}$, it is always possible to find $\alpha_o$ such that for $\alpha \in (0, \alpha_o)$

$$|u(x;\alpha) - \sigma_o(\alpha)u_o(x)| < \sigma_1|u_1(x)| \tag{3.5}$$

$$< \left|\frac{\sigma_1(\alpha)}{\sigma_o(\alpha)}\right| M_1|\sigma_o(\alpha)u_o(\alpha)|$$

$$< \varepsilon_o|\sigma_o(\alpha)u_o(\alpha)| \ ,$$

i.e.,

$$|\sigma_o(\alpha)u_o(x)| < \frac{1}{1-\varepsilon_o}\ |u(x;\alpha)| < (1 + 2\varepsilon_o)|u(x;\alpha)| \ ,$$

from which the desired result follows:

$$|u(x;\alpha) - \sigma_o(\alpha)u_o(x)| < \varepsilon_o(1 + 2\varepsilon_o)|u(x;\alpha)| \ .$$

For $k > 0$, the same result may be obtained by using the inequality (3.5).

$$|u(x;\alpha) - \sum_{n=o}^{k} \sigma_n(\alpha)u_n(x)| < \left|\frac{\sigma_{k+1}(\alpha)}{\sigma_k(\alpha)}\right| |\sigma_o u_o| \left|\frac{{}_{k+1}(x)}{u_o(x)}\right|$$

$$< (1 + 2\varepsilon_o)M_{k+1}\left|\frac{\sigma_{k+1}(\alpha)}{\sigma_k(\alpha)}\right| |u(x;\alpha)|$$

$$< \varepsilon_k|u(x;\alpha)| \ . \tag{3.6}$$

In the foregoing discussion limiting processes have been carried out in a loose manner to save writing. The precise meaning of inequality (3.6) is given as follows: if $\sigma_n(\alpha)$ and $u_n(x)$, $n = 0, 1, \ldots, N$, satisfy equation (3.3) and (3.4), then for a given $\varepsilon_k > 0$, there exists a $\alpha_k > 0$, such that for

$\alpha \in (0,\alpha_k)$,

$$|u(x;\alpha) - \sum_{n=o}^{k} \sigma_n(\alpha)u_n(x)| < \varepsilon_k|u(x;\alpha)| \tag{3.6}$$

for $k = 0, 1, \ldots, N$. That is, $\sum_{n=o}^{k} \sigma_n(\alpha)u_n(x)$ is an approximate solution to equation (3.1) within a relative error $\varepsilon_k$.

In the sequel, discussions will be restricted to uniformly asymptotic expansions and approximate solutions within a relative error.

However, uniformly asymptotic expansions are most useful in the cases where the solution $u(x;\alpha)$ to equation (3.1) is not known a priori. In such cases, it is necessary to obtain information about $\sigma_n(\alpha)$ and $u_n(x)$ directly from equation (3.1). A theory which can achieve this task is called a uniformly valid asymptotic theory. In general, if a uniformly valid asymptotic theory is realizable, the asymptotic ordering $\sigma_n(\alpha)$ will manifest itself after certain properly arranged limiting processes are taken on equation (3.1) and the function $u_n(x)$ will be governed by a sequence of equations resulted from these limiting processes which have the form

$$L_n(x, u_n(x)) = g_n(x) ,$$

which may be called the n-th order asymptotic equation for the problem.

## III.2. Nearly Free-molecule Flows

As stated in the first chapter, the present study is primarily concerned with the problem of a uniform rarefied gas flow past a body under the condition that the characteristic dimension of the body is much smaller than the mean free path of the gas. This condition is called the nearly free-molecule condition. Throughout the analysis it is assumed that the gas is of infinite extent and the body is a two-dimensional cylinder of convex cross section. Three-dimensional problems can be treated in a similar manner.

Let the number density, the temperature, and the velocity of the undisturbed flow be $n_o$, $T_o$, and $\underline{U}\sqrt{2RT_o}$, and the coordinate system be so chosen that the cross-sectional contour of the cylinder is defined by a single-valued and piecewise differentiable function $\mathcal{R}(\theta)$ through the relation

$$r = \mathcal{R}(\theta).$$

This is the very problem considered in section II.3. The mathematical problem is then to find a function $\Phi(\underline{c};r,\theta;\alpha)$ satisfying equations (2.16) and (2.17). For this problem, the nearly free-molecule condition is simply $\alpha \ll 1$. The task is to find uniformly asymptotic expansions for $\Phi(\underline{c};r,\theta;\alpha)$, i.e., to derive a uniformly valid asymptotic theory under the condition $\alpha \ll 1$. By uniformly asymptotic is meant uniformly in $(r,\theta)$ plane.

Before going into the details of how such a theory is worked out, it is found clarifying to point out two basic ideas which underlie the entire theory. For convenience of discussion, let the $(r,\theta)$ plane be divided into two regions, an inner region for $r < \tau$ and an outer region for $r > \tau$. As a function of $\alpha$, $\tau$ has the property that

$$\lim_{\alpha \to 0} \tau = \infty \tag{3.7a}$$

and

$$\lim_{\alpha \to 0} \alpha\tau = 0 \tag{3.7b}$$

while the explicit form of $\tau(\alpha)$ is yet to be determined. The two basic ideas are as follows. Firstly, at a point in the inner region, the distance from the body is very small compared with the mean free path $1/\alpha$, as is evidenced by (3.7b), and consequently the collisional effects are only secondary, at least for molecules of moderate speed. Secondly, in the outer region the angle subtended by the body is very small, and in fact if the mean free path $1/\alpha$ is used as the length scale, in the outer flow field the only quantities which involve $\alpha$ are the sizes of the body and the inner region which both shrink to zero in the limit $\alpha \to 0$. These different features in the inner and outer regions seem to suggest that $\Phi(\underline{c};r,\theta;\alpha)$, in the limit $\alpha \to 0$, has different behavior in the two regions. Therefore, to investigate the nature of $\Phi$ in the limit $\alpha \to 0$, it is expedient to consider $\Phi(\underline{c};r,\theta;\alpha)$ as defined by two

functions: $\hat{\Phi}(\underline{c};r,\theta;\alpha)$ restricted to the inner region and $\tilde{\Phi}(\underline{c};\rho,\theta;\alpha)$ restricted to the outer region where the independent variable r has been changed to $\rho = \alpha r$ as is suggested by the use of the mean free path $1/\alpha$ as the length scale. The precise definitions of these new functions are

$$\hat{\Phi}(\underline{c};r,\theta;\alpha) = \Phi(\underline{c};r,\theta;\alpha) \quad \text{for} \quad r < \tau \tag{3.8a}$$

$$\tilde{\Phi}(\underline{c};\rho,\theta;\alpha) = \Phi(\underline{c};\ \frac{\rho}{\alpha},\ \theta;\ \alpha) \quad \text{for} \quad \rho > \alpha\tau. \tag{3.8b}$$

So far no elements of arbitrariness have been introduced into the above definitions; they are simply different ways of rewriting $\Phi(\underline{c};r,\theta;\alpha)$. But, as mentioned earlier, if, in the limit $\alpha \rightarrow 0$, $\Phi(\underline{c};r,\theta;\alpha)$ has different behavior in the outer and inner regions, $\hat{\Phi}(\underline{c};r,\theta;\alpha)$ and $\tilde{\Phi}(\underline{c};\rho,\theta;\alpha)$ will eventually have to be treated as different functions. The aim of the uniformly valid asymptotic theory is to obtain uniformly asymptotic expansions for $\hat{\Phi}(\underline{c};r,\theta;\alpha)$ and $\tilde{\Phi}(\underline{c};\rho,\theta,\alpha)$, in the limit $\alpha \rightarrow 0$, directly from equations (2.16) and (2.17). To this end, equation (2.16) is rewritten in terms of the new functions $\hat{\Phi}(\underline{c};r,\theta;\alpha)$ and $\tilde{\Phi}(\underline{c};\rho,\theta;\alpha)$. In the inner region equation (2.16) then becomes

$$\hat{\Phi}(\underline{c};r,\theta;\alpha) = \Psi(\underline{c};r,\theta;\alpha) + \alpha B_1\left[\int_{R_b}^{\tau} \hat{\Phi}\, T_b\, dr' + \frac{1}{\alpha}\int_{\alpha\tau}^{\infty} \tilde{\Phi}\, T_b\, d\rho'\right]$$

$$+ \alpha B_2\left[\int_{R_b}^{\tau} \hat{\Phi}\, T_b\, dr' + \frac{1}{\alpha}\int_{\alpha\tau}^{\infty} \tilde{\Phi}\, T_b\, d\rho'\right] +$$

$$+ \alpha I_1 \left[ \int_{R_b}^{r} \hat{\Phi} T_1 dr' \right] + \alpha I_2 \left[ \int_{r\sin|\phi_1|}^{r} \hat{\Phi} T_1 dr' \right] \quad (3.9)$$

$$+ \alpha I_2 \left[ \int_{r\sin|\phi_1|}^{\tau} \hat{\Phi} T_2 dr' + \frac{1}{\alpha} \int_{\alpha\tau}^{\infty} \tilde{\Phi} T_2 d\rho' \right]$$

$$+ \alpha I_3 \left[ \int_{r}^{\tau} \hat{\Phi} T_1 dr' + \frac{1}{\alpha} \int_{\alpha\tau}^{\infty} \tilde{\Phi} T_1 d\rho' \right]$$

where $\rho' = \alpha r'$ and in the integrands the following short-hand notations have been used:

$$\hat{\Phi} = \hat{\Phi}(c_{z_1}, s_1, \phi'; r', \theta'; \alpha)$$

$$\tilde{\Phi} = \tilde{\Phi}(c_{z_1}, s_1, \phi'; \rho', \theta'; \alpha)$$

$$\phi' = \sin^{-1}\left(\frac{r}{r'} \sin\phi_1\right) = \sin^{-1}\left(\frac{\alpha r}{\rho'} \sin\phi_1\right)$$

$$\theta' = \theta + \phi_1 - \phi'$$

$$T_{1,2} = T_{1,2}(\xi_1; r, r'; \alpha) = T_{1,2}(\xi_1; r, \frac{\rho'}{\alpha}; \alpha)$$

$$T_b = T_1(\xi_1; R_b, r'; \alpha) = T_1(\xi_1; R_b, \frac{\rho'}{\alpha}; \alpha)$$

And, in the outer region $\rho > \alpha\tau$, equation (2.16) may be written as

$$\tilde{\Phi}(\xi; \rho, \theta; \alpha) = \Psi(\xi; \frac{\rho}{\alpha}, \theta; \alpha) + \alpha \sum_{\mu=1}^{2} B_\mu \left[ \int_{R_b}^{\tau} \hat{\Phi} T_b dr' + \frac{1}{\alpha} \int_{\alpha\tau}^{\infty} \tilde{\Phi} T_b d\rho' \right]$$

$$+ \alpha I_4 [\hat{\Phi}] + \alpha I_5 [\tilde{\Phi}] +$$

$$+\alpha I_1\left[\int_{R_b}^{\tau}\hat{\Phi}\,T_1\,dr' + \frac{1}{\alpha}\int_{\alpha\tau}^{\infty}\tilde{\Phi}\,T_1\,d\rho'\right]$$

$$+\alpha I_3\left[\frac{1}{\alpha}\int_{\rho}^{\infty}\tilde{\Phi}\,T_1\,d\rho'\right] + \alpha I_2\left[\frac{1}{\alpha}\int_{\rho}^{\infty}\tilde{\Phi}\,T_2\,d\rho'\right] \qquad (3.10)$$

where

$$I_4[\hat{\Phi}] = \int_{-\infty}^{\infty} dc_{z_1}\int_0^{\infty} ds_1\left[\int_{a_1}^{\tau} dr'\int_{-b}^{-\Theta_1} d\phi_1 + \int_{a_2}^{\tau} dr'\int_{\Theta_2}^{b} d\phi_1\right](T_1+T_2)\,K(\underline{c},\underline{c}_1)\,\hat{\Phi}$$

$$I_5[\tilde{\Phi}] = \frac{1}{\alpha}\int_{-\infty}^{\infty} dc_{z_1}\int_0^{\infty} ds_1\left[\int_{\alpha\tau}^{\infty} dr'\int_{-d}^{-\Theta_1} d\phi_1 + \int_{\alpha\tau}^{\infty} dr'\int_{\Theta_2}^{d} d\phi_1\right](T_1+T_2)\,K(\underline{c},\underline{c}_1)\,\tilde{\Phi}$$

$$a_1 = \frac{\rho}{\alpha}\sin\Theta_1 \;, \quad a_2 = \frac{\rho}{\alpha}\sin\Theta_2 \,,$$

$$b = \sin^{-1}\frac{\alpha r'}{\rho} \;, \quad d = \sin^{-1}\frac{\rho'}{\rho} \,.$$

and in the integrands

$$\hat{\Phi} = \hat{\Phi}(c_{z_1}, s_1, \phi'; r', \theta'; \alpha)$$

$$\tilde{\Phi} = \tilde{\Phi}(c_{z_1}, s_1, \phi'; \rho', \theta'; \alpha)$$

$$\phi' = \sin^{-1}\left(\frac{\rho}{\alpha r'}\sin\phi_1\right) = \sin^{-1}\left(\frac{\rho}{\rho'}\sin\phi_1\right)$$

$$\theta' = \theta + \phi_1 - \phi'$$

$$T_{1,2} = T_{1,2}\left(\underline{c}_1; \frac{\rho}{\alpha}, r'; \alpha\right) = T_{1,2}\left(\underline{c}_1; \frac{\rho}{\alpha}, \frac{\rho'}{\alpha}; \alpha\right)$$

$$T_b = T_1\left(\underline{c}_1; R_b, r'; \alpha\right) = T_1\left(\underline{c}_1; R_b, \frac{\rho'}{\alpha}; \alpha\right).$$

And, condition (2.7) simply goes over to

$$\lim_{\rho\to\infty} \tilde{\Phi}(\underline{c};\rho,\theta;\alpha) = 0 \quad \text{for} \quad c_r < 0 \,. \qquad (3.11)$$

Thus far no approximation has been introduced into equation

(3.9), (3.10) and (3.11); they are exact. But from now on the validity of equation (3.9) will be restricted to the inner region $r < \tau$, and that of equations (3.10) and (3.11) to the outer region $\rho > \alpha\tau$ so that different simplifications can be made accordingly to derive asymptotic expansions for $\hat{\Phi}$ and $\tilde{\Phi}$.

## III.3. Outer Solutions

Let it be assumed that for the functions $\hat{\Phi}(\underline{c};r,\theta;\alpha)$ and $\tilde{\Phi}(c;\rho,\theta;\alpha)$ there exist uniformly asymptotic expansions of the type $\Sigma\hat{\sigma}_n(\alpha)\hat{\Phi}_n(\underline{c};r,\theta)$ and $\Sigma\tilde{\sigma}_n(\alpha)\tilde{\Phi}_n(\underline{c};\rho,\theta)$ which satisfy conditions (3.3) and (3.4). It will be shown that under this assumption the fun tions $\hat{\sigma}_n(\alpha)$, $\tilde{\sigma}_n(\alpha)$ and $\hat{\Phi}_n(c;r,\theta)$ can be derived from the equations (3.9) and (3.10). Also derived from (3.10) is a sequence of integral equations, each independent of $\alpha$, whose solutions are the functions $\tilde{\Phi}_n(\underline{c}:\rho,\theta)$.

Since both $\hat{\Phi}$ and $\tilde{\Phi}$ appear in equations (3.9) and (3.10) it is necessary to make certain estimates for one or the other to initiate the asymptotic analysis. The estimate which is made here is that the lowest order asymptotic expansion of $\hat{\Phi}$ in the inner region is the free-molecule solution to the problem. With this estimate $\tilde{\sigma}_o(\alpha)$ can be explicitly obtained from equation (3.10), which, in the limit $\alpha \longrightarrow 0$, becomes an equation for $\tilde{\Phi}_o$ and is free of $\alpha$. Making use of these results for $\tilde{\sigma}_o(\alpha)$ and $\tilde{\Phi}_o$, $\hat{\sigma}_o\hat{\Phi}_o$ can then be evaluated from equation (3.9)

and is to be checked against the estimate previously made to ensure self-consistency. In what follows, the results for $\tilde{\sigma}_o$ $\tilde{\Phi}_o$ will be worked out in steps.

First of all the asymptotic expansions of the known function $\Psi(\underline{c}; \frac{\rho}{\alpha}, \theta, \alpha)$ and the various integrals involving $\hat{\sigma}_o \hat{\Phi}_o$ are to be calculated in the outer region. In this connection, it is noted that in the outer region $\Theta_1$ and $\Theta_2$ are very small angles and can be expanded asymptotically as

$$\Theta_1(\frac{\rho}{\alpha}, \theta) \approx \frac{\alpha}{\rho} \Theta_{10}(\theta) + \frac{\alpha^2}{\rho^2} \Theta_{11}(\theta) \tag{3.12}$$

$$\Theta_2(\frac{\rho}{\alpha}, \theta) \approx \frac{\alpha}{\rho} \Theta_{20}(\theta) + \frac{\alpha^2}{\rho^2} \Theta_{21}(\theta)$$

It will then be shown that the function $\Psi(\underline{c}; \frac{\rho}{\alpha}, \theta; \alpha)$ can be expanded asymptotically as

$$\Psi(\underline{c}; \frac{\rho}{\alpha}, \theta; \alpha) \approx \frac{\alpha}{\rho} \tilde{\Psi}_o(\underline{c}; \rho, \theta) .$$

To this end, it is observed that

$$\Psi(\underline{c}; \frac{\rho}{\alpha}, \theta; \alpha) \approx -2U I_1 \Big[ \cos\theta_n \Big\{ c_1 + \frac{\sqrt{\pi}}{4}\Big(1 + \frac{c_1^2}{2}\Big) \Big\} \tag{3.13}$$

$$\times \exp\Big\{ -\frac{\alpha \nu(c_1)}{s_1} \Big( r\cos\phi_1 - \sqrt{R_b^2 - r^2 \sin^2\phi_1} \Big) \Big\} \Big]$$

In the above integrand the factor $\cos\theta_n$ calls for special precautions because of its strong dependence on $\phi_1$. To overcome the difficulty caused by this strong dependence,

it is useful to introduce a new coordinate system $(\beta,\theta)$ for the cross-sectional contour, where $\theta$ is the polar angle $\theta$ of $(\rho,\theta)$ and $\beta$ is the angle between the position vector of a point $(p,\theta')$ on the contour and a straight line of inclination $\theta$. (See Figure 3.) In the $(\beta,\theta)$ coordinates, $R_b$, $\theta'$ and $\theta_n$ may be written as $p = p(\beta,\theta)$, $\theta' = \theta'(\beta,\theta)$, and $\theta_n = \theta_n(\beta,\theta)$. In the limit of $\tau \longrightarrow \infty$ while $\rho/\alpha > \tau$, a simple form can be found for $\Phi_1$ as a function of $\beta$ with fixed $\theta$ and $\rho$. In fact,

$$\sin \Phi_1 = \frac{\alpha p(\beta,\theta)}{\rho} \sin \beta \ ,$$

$$d\Phi_1 = \frac{\alpha}{\rho \cos \Phi_1} (p \cos \beta + \sin \beta \frac{dp}{d\beta}) d\beta \ ,$$

$$= \frac{\alpha}{\rho} \frac{1}{\cos \Phi_1} \mathcal{B}(\beta,\theta) d\beta \ ,$$

and as $\rho/\alpha \rightarrow \infty$,

$$\Phi_1 \approx \frac{\alpha}{\rho} p(\beta,\theta) \sin \beta \ ,$$

$$d\Phi_1 \approx \frac{\alpha}{\rho} (p \cos \beta + \sin \beta \frac{dp}{d\beta}) d\beta$$

$$\approx \frac{\alpha}{\rho} \mathcal{B}(\beta,\theta) d\beta \ .$$

For given $(\rho,\theta)$ the values of $\beta$ which correspond to $\Phi_1$ equal to $-\Theta_1$ and $\Theta_2$ are respectively

$$\beta_1(\rho,\theta) = \sin^{-1}\left(\frac{1}{p(\beta,\theta)} \frac{\rho}{\alpha} \sin \Theta_1\right) \tag{3.14a}$$

and

$$\beta_2(\rho,\theta) = \sin^{-1}\left(\frac{1}{p(\beta,\theta)}\,\frac{\rho}{\alpha}\,\sin\Theta_2\right) \tag{3.14b}$$

Then, upon changing the integration variable $\Phi_1$ into $\beta$, equation (3.13) becomes

$$\Psi\left(c;\frac{\rho}{\alpha},\theta;\alpha\right) \approx -\frac{2\alpha U}{\rho}\int_{-\beta_1(\rho,\theta)}^{\beta_2(\rho,\theta)} d\beta\,\Gamma\left[\exp\left\{-\frac{\nu}{s_1}\left(\sqrt{\rho^2-\alpha^2\sin^2\beta}-\alpha(\rho\cos\beta)\right)\right\}\right], \tag{3.15}$$

where $\Gamma[g] = \int_{-\infty}^{\infty} d\xi_1 \int_0^{\infty} ds_1\, B(\rho,\theta)\cos\theta_n\, s_1\left[c_1+\frac{\sqrt{\pi}}{4}\left(1+\frac{c_1^2}{2}\right)\right] K(\xi,\xi_1)\, g$.

In the limit $\rho/\alpha \rightarrow \infty$, $\beta_1(r,\theta)$ and $\beta_2(r,\theta)$ may be represented by

$$\beta_1(r,\theta) \approx \sin^{-1}\left(\frac{1}{p(\beta,\theta)}\,\Theta_{10}(\theta)\right)$$

$$\beta_2(r,\theta) \approx \sin^{-1}\left(\frac{1}{p(\beta_2,\theta)}\,\Theta_{20}(\theta)\right)$$

or, on solving the above equations,

$$\beta_1(r,\theta) \approx \sin^{-1}\left(\frac{1}{p_1}\,\Theta_{10}(\theta)\right) \tag{3.16a}$$

$$\beta_2(r,\theta) \approx \sin^{-1}\left(\frac{1}{p_2}\,\Theta_{20}(\theta)\right) \tag{3.16b}$$

which will be written respectively as $\beta_1(\theta)$ and $\beta_2(\theta)$.

If, in obtaining the asymptotic expansions for $\Psi\left(c;\frac{\rho}{\alpha},\theta;\alpha\right)$ the limits of integration $-\beta_1(r,\theta)$ and $\beta_2(r,\theta)$ in equation (3.15) can be replaced by $-\beta_1(\theta)$ and $\beta_2(\theta)$ as defined by (3.16), then

$$\Psi(\underline{c};\tfrac{\rho}{\alpha},\theta;\alpha) \approx -\frac{2\alpha U}{\rho}\int_{-\beta_1(\theta)}^{\beta_2(\theta)} d\beta\, \Gamma\left[\exp\left\{-\frac{U}{s_1}\left(\sqrt{\rho^2-\alpha^2\rho^2\sin^2\beta}-\alpha\rho\cos\beta\right)\right\}\right]$$

In the limit $\alpha \rightarrow 0$, the above integral is found to approach a function independent of $\alpha$. If this function is denoted by $\frac{1}{2}\tilde{\Psi}_0(\underline{c};\rho,\theta;\alpha)$, the lowest order asymptotic expansion for $\Psi(\underline{c};\frac{\rho}{\alpha},\theta;\alpha)$ may be written as

$$\Psi(\underline{c};\tfrac{\rho}{\alpha},\theta;\alpha) \approx -\frac{\alpha U}{\rho}\tilde{\Psi}_0(\underline{c};\rho,\theta) \quad . \tag{3.17}$$

The derivation of (3.17) is lengthy and may be found in Appendix II. Asymptotic expansions of this type are conceptually analogous to the multipole expansions for a localized electrostatic charge distribution, the lowest order expansion being the monopole term or the contribution due to the net charge. Following the same method used in Appendix II, the replacement of the limits of integration $-\beta_1(\rho,\theta)$ and $\beta_2(\rho,\theta)$ in equation (3.15) by $-\beta_1(\theta)$ and $\beta_2(\theta)$, defined in (3.16), can be shown to be legitimate.

In a similar manner, the lowest order asymptotic expansions for $B_i[\int_{R_b}^{\tau}\hat{\Phi}T_b\,dr'+\frac{1}{\alpha}\int_{\alpha\tau}^{\infty}\tilde{\Phi}T_b\,d\rho']$, $i = 1, 2$, and $I_1$ are obtained as

$$B_i \approx \frac{\alpha}{\rho}\tilde{B}_{i0}\left[\int_{R_b}^{\tau}\hat{\Phi}T_b\,dr'+\frac{1}{\alpha}\int_{\alpha\tau}^{\infty}\tilde{\Phi}T_b\,d\rho'\right] \tag{3.18}$$

and

$$I_1[g] \approx \frac{\alpha}{\rho} I_{10}[g]$$

where

$$R_b = R_b(\beta, \rho, \theta)$$

$$B_{10}[g] = \frac{2}{\pi}\int_{-\infty}^{\infty} dc_{z_1} \int_0^{\infty} ds_1 \int_{-\beta_1(\theta)}^{\beta_2(\theta)} d\beta\, B(\beta,\theta) s_1 \exp\left\{c_1^2 - \frac{\nu}{s_1}\rho\right\} K(\underline{s},\underline{c}_1) \iiint_{c_{n_0}<0} d^3c_0\, (3-c_0^2)\, g \exp(-c_0^2)$$

$$B_{20}[g] = \frac{2}{\pi}\int_{-\infty}^{\infty} dc_{z_1} \int_0^{\infty} ds_1 \int_{-\beta_1(\theta)}^{\beta_2(\theta)} d\beta\, B(\beta,\theta) s_1 c_1^2 \exp\left\{-c_1^2 - \frac{\nu}{s_1}\rho\right\} K(\underline{s},\underline{c}_1) \iiint d^3c_0 \left(\frac{c_0^2}{2}-1\right) g \exp(-c_0^2)$$

$$I_{10}[g] = \int_{-\infty}^{\infty} dc_{z_1} \int_0^{\infty} ds_1 \int_{-\beta_1(\theta)}^{\beta_2(\theta)} d\beta\, B(\beta,\theta) K(\underline{s},\underline{c}_1)\, g$$

It should be noted that the asymptotic expansions (3.17) and (3.18) are only valid for c not too large. More precisely, they are only valid for $c < \Delta_2(\alpha)$ where the function $\Delta_2(\alpha)$ approaches infinity as $\alpha \rightarrow 0$ (cf. Appendix II). This restriction is not detrimental to the asymptotic theory, for there is only an exponentially small number of molecules with a velocity $c > \Delta_2(\alpha)$ and consequently the contribution from such molecules to any moments of the distribution function is exponentially small and thus altogether negligible. To obtain higher order asymptotic expansions for $\Psi(\underline{c};r,\theta;\alpha)$, $B_1$, and $B_2$, it is necessary to take into account the effects due to the persis-

tence of the molecular velocity and the much shorter free path of the slow molecules; neither of these effects are appreciable in the lowest order expansions (3.17) and (3.18).

Now the lowest order inhomogeneous term in equation (3.10) is of the order $\alpha$ and thus suggests that $\tilde{\sigma}_0(\alpha) = \alpha$. Let equation (3.10) be divided by $\alpha$. If a limiting process $\alpha \to 0$ is performed on this new equation and if the order of this limiting process and the integrations can be interchanged freely, the following equation will result:

$$\begin{aligned}\tilde{\Phi}_0(\underline{c};\rho,\theta) = &-\frac{U}{\rho}\tilde{\Psi}_0(\underline{c};\rho,\theta) + \frac{\alpha}{\rho}\sum_{\mu=1}^{2} B_{\mu 0}\Big[\int_{R_b}^{\tau}\hat{\Phi}\,T_b\,dr' + \int_{\alpha\tau}^{\infty}\tilde{\Phi}_0 T_b\,d\rho'\Big] \\ &+ I_1\Big[\int_{R_b}^{\tau}\hat{\Phi}\,T_1\,dr' + \int_{\alpha\tau}^{\infty}\tilde{\Phi}_0 T_1\,d\rho'\Big] + I_2\Big[\int_{\rho}^{\infty}\tilde{\Phi}_0 T_2\,d\rho'\Big] \\ &+ I_3\Big[\int_{\rho}^{\infty}\tilde{\Phi}_0 T_1\,d\rho'\Big] + I_4[\hat{\Phi}] + I_5[\tilde{\Phi}],\end{aligned} \tag{3.18}$$

where $\tilde{\Phi}_0(\underline{c};\rho,\theta) = \lim_{\alpha\to 0}\frac{1}{\alpha}\tilde{\Phi}(\underline{c};\rho,\theta;\alpha)$.

In the above expressions, for all the terms involving $\alpha$, $\tau$, $\Theta_1$ and $\Theta_2$, a limiting process $\alpha \to 0$ is understood to have been taken. To carry out this process more explicitly, it is necessary to know the behavior of $\tilde{\Phi}_0$ as $\rho \to 0$. However, since $\hat{\sigma}_0\hat{\Phi}_0$ and $\tilde{\sigma}_0\tilde{\Phi}_0$ must match asymptotically, it is seen that

$$\tilde{\Phi}_0 \approx \frac{\tilde{\Psi}_0(\underline{c};\rho,\theta)}{\rho} \quad \text{as} \quad \rho \to 0 .$$

Now Hadamard's finite part concept can be used to carry out the limiting process. For example, the operands of the operators $B_{\mu o}$, in the limit $\alpha \to 0$, may be calculated in the following manner

$$\lim_{\alpha \to 0} \int_{R_b}^{\tau} \hat{\Phi}_o T_b \, dr' \approx \int_{R_b}^{\tau} \hat{\Phi}_o (c_{z_o}, s_o, \phi'; r', \theta + \phi_o - \phi) \hat{T}_b \, dr' \tag{3.19}$$

$$\approx (\ln \tau) \hat{G}_o(\xi_o, \theta) + \fint_{R_b}^{\infty} \hat{\Phi}_o \hat{T} \, dr'$$

where

$$T_b = r' / \sqrt{r'^2 - R_b^2 \sin^2 \phi_o}$$

$$G_o(\xi_o, \theta) = - U \tilde{\Phi}_o (c_{z_o}, s_o, 0; 0, \theta + \phi_o),$$

and

$$\fint_{R_b}^{\infty} \hat{\Phi}_o \hat{T}_b dr' = \lim_{\substack{\tau \to \infty \\ (\alpha \to 0)}} \left[ \int_{R_b}^{\tau} \hat{\Phi}_o \hat{T}_b \, dr' - (\ln \tau) \hat{G}_o(\xi_o, \theta) \right],$$

which is a finite quantity, independent of $\alpha$.

And similarly

$$\lim_{\alpha \to 0} \int_{\alpha\tau}^{\infty} \tilde{\Phi}_o T_b \, d\rho' = -(\ln \alpha\tau) \hat{G}_o(\xi_o, \theta) + \fint_{0}^{\infty} \tilde{\Phi}_o \tilde{T}_b \, d\rho' \tag{3.20}$$

where

$$\tilde{T}_b = \exp\left\{ - \frac{\nu(c_o)}{s_o} \rho' \cos \phi_o \right\}$$

and

$$\fint_{0}^{\infty} \tilde{\Phi}_o \tilde{T}_b \, d\rho' = \lim_{\alpha \to 0} \left[ \int_{\alpha\tau}^{\infty} \tilde{\Phi} \tilde{T}_b \, d\rho' + (\ln \alpha\tau) \hat{G}_o(\xi_o, \theta) \right]$$

Combining equations (3.19) and (3.20) yields the following results.

$$\int_{R_b}^{\tau} \hat{\Phi}_0 T_b \, dr' + \int_{\alpha\tau}^{\infty} \tilde{\Phi}_0 T_b \, d\rho' \approx -(\ln \alpha)\, \hat{G}_0(\xi_0, \theta) + \int_{R_b}^{\infty} \hat{\Phi}_0 \hat{T}_b \, dr' + \int_0^{\infty} \tilde{\Phi}_0 \tilde{T}_b \, d\rho'$$

Therefore, as $\alpha \rightarrow 0$, the terms of $B_{10}$ and $B_{20}$ approaches zero; i.e.,

$$\lim_{\alpha \to 0} \frac{\alpha}{\rho} B_{\mu 0} \left[ -(\ln \alpha) \hat{G}_0 + \int_{R_b}^{\infty} \hat{\Phi}_0 \hat{T}_b \, dr' + \int_0^{\infty} \tilde{\Phi}_0 \tilde{T}_b \, d\rho' \right] = 0$$

In a similar manner, it may be shown that

$$\lim_{\alpha \to 0} I_1 \left[ \int_{R_b}^{\tau} \hat{\Phi}_0 T_1 \, dr' + \int_{\alpha\tau}^{\infty} \tilde{\Phi} T_1 \, d\rho' \right] = 0$$

and

$$\lim_{\alpha \to 0} I_4[\hat{\Phi}] = 0$$

Now, consider the term in (3.18) which involved $I_5$. If the variable $\Phi_1$ is changed into $\beta$ through the relation

$$\rho \sin \beta = \rho' \sin \Phi_1 ,$$

this term may be written as

$$I_5[\tilde{\Phi}_0] = \frac{1}{\rho} \int_{-\infty}^{\infty} d\zeta_1 \int_0^{\infty} ds_1 \int_0^{\rho} \rho' d\rho' \left[ \int_{-\frac{\pi}{2}}^{0} + \int_0^{\pi/2} \right] d\beta \cos\beta \, (T_1 + T_2) \tilde{\Phi}_0 K(\xi, \xi_1)$$

$$= I_{50}[\tilde{\Phi}_0]$$

Finally, it can be shown that

$$I_2\left[\int_\rho^\infty \tilde{\Phi}_0 T_2 \, d\rho'\right] = I_{20}\left[\int_\rho^\infty \tilde{\Phi}_0 T_2 \, d\rho'\right]$$

where

$$I_{20}[g] = \int_{-\infty}^{\infty} dc_{z_1} \int_0^\infty ds_1 \left[\int_{-\frac{\pi}{2}}^{0} + \int_0^{\frac{\pi}{2}}\right] d\phi_1 \, g \, K(\underline{c}, \underline{c}_1)$$

Summing all these results for equation (3.18) yields the lowest order asymptotic equation for $\tilde{\Phi}_0$ as follows

$$\tilde{\Phi}_0(\underline{c};\rho,\theta) = -\frac{U}{\rho}\tilde{\Psi}_0(\underline{c};\rho,\theta) + I_3\left[\int_\rho^\infty \tilde{\Phi}_0 T_1 \, d\rho'\right] \tag{3.21}$$

$$+ I_{20}\left[\int_\rho^\infty \tilde{\Phi}_0 T_2 \, d\rho'\right] + I_{50}\left[\tilde{\Phi}_0\right]$$

The boundary condition (3.11), when applied to $\tilde{\Phi}_0$, becomes

$$\lim_{\rho \to \infty} \tilde{\Phi}_0(\underline{c};\rho,\theta) = 0 \quad \text{for} \quad c_r < 0 \, . \tag{3.22}$$

Equations (3.21) and (3.22) define the lowest order outer solution $\Phi_0(\underline{c};\rho,\theta)$. It should be emphasized that equation (3.21) is independent of $\alpha$.

Also, it should be noted that the outer region is not a region throughout which collisional effects dominate. In fact, in the part of this region where $\rho \to \alpha\tau$, which is very small, the nature of the flow field is that of the free-molecule flow. In the part of the outer region where $\rho \to \infty$, the flow field is presumably a collision-dominated one. And, in between, a full transition may be expected.

## III.4. Inner Solutions

After the results have been obtained for $\tilde{\sigma}_o$ and $\tilde{\Phi}_o$, equation (3.9) can be used to calculate the inner solution $\hat{\sigma}_1\hat{\Phi}_1$. First of all, the inhomogeneous term $\Psi(\underline{c};r,\theta,\alpha)$ is expanded asymptotically for small $\alpha r$ as

$$\Psi(\underline{c};r,\theta;\alpha) \approx \hat{\Psi}_o(\underline{c};r,\theta) + \alpha\hat{\Psi}_1(\underline{c};r,\theta) \tag{3.23}$$

for $1 \leq r \leq \tau$, where

$$\hat{\Phi}_o(\underline{c};r,\theta) \approx \frac{1}{r}\tilde{\Psi}_o(\underline{c};0,\theta) \quad \text{as} \quad r \to \infty$$

$$\hat{\Psi}_1(\underline{c};r,\theta) \approx \hat{G}_1(\underline{c};\theta) \qquad \text{as} \quad r \to \infty .$$

Now, on the R.H.S. of equation (3.9), $\hat{\Phi}$ and $\tilde{\Phi}$ may be replaced by $\hat{\Phi}_o$ and $\tilde{\sigma}_o\tilde{\Phi}_o$ respectively. For example, consider the term $I_3$.

$$\begin{aligned} & I_3\left[\int_r^\tau \hat{\Phi}\, T_1 dr' + \frac{1}{\alpha}\int_{\alpha\tau}^\infty \tilde{\Phi}\, T_1 d\rho'\right] \\ & \approx I_3\left[\int_r^\tau \hat{\Phi}_o T_1 dr' + \int_{\alpha\tau}^\infty \tilde{\Phi}_o T_1 d\rho'\right] \end{aligned} \tag{3.24}$$

which is a consequence of the basic assumptions that

$$|\hat{\Phi} - \hat{\Phi}_o| < \varepsilon_o|\hat{\Phi}_o| \qquad \text{for} \quad r < \tau,$$

$$|\tilde{\Phi} - \tilde{\sigma}_o\tilde{\Phi}_o| < \alpha\varepsilon_o|\tilde{\Phi}_o| \quad \text{for } \rho > \alpha\tau ,$$

and $\varepsilon_o(\alpha) \rightarrow 0$ as $\alpha \rightarrow 0$.

For $r < \tau$, the function $T_i(\underline{c};r,r';\alpha)$, $i = 1,2$, has the asymptotic expansion

$$T_i \approx \hat{T} = \frac{r'}{\sqrt{r'^2 - r^2 \sin^2 \phi_1}} \tag{3.25a}$$

And for $T_i(\underline{c}_1;r, \frac{\rho'}{\alpha};\alpha)$ it will be assumed that $\alpha r \ll \rho'$, and the result is

$$T_i(\underline{c}_1;r, \frac{\rho'}{\alpha};\alpha) \approx \tilde{T} = \exp\left\{-\frac{\nu(c_1)}{s_1}\rho'\right\} \tag{3.25b}$$

It should be noted that (3.25b) is not valid for $r \rightarrow \tau$ and $\rho' \rightarrow \alpha\tau$. Therefore, to use (3.25b), it is necessary to make the restriction that $r \leq \tau_1$ where $\tau_1$ has the properties that $\tau_1 \rightarrow \infty$, $\alpha\tau_1 \rightarrow 0$, and $\tau_1/\tau \rightarrow 0$ as $\alpha \rightarrow 0$. Since $\hat{\Phi}_n$ does not depend on $\alpha$, the asymptotic expansions $\Sigma\, \hat{\sigma}_n \hat{\Phi}_n$ for $\hat{\Phi}$ will be extended to cover the interval $(\tau_1, \tau)$.

With the results in (3.25a) and (3.25b) for the function $T_i$, equation (3.24) may be written as

$$I_3[\int_r^\tau \hat{\Phi}\, T_1 dr' + \frac{1}{\alpha}\int_{\alpha\tau}^\infty \tilde{\Phi}\, T_1 d\rho'] \approx I_3[\int_r^\tau \hat{\Phi}_o \hat{T}\, dr' + \int_{\alpha\tau}^\infty \tilde{\Phi}_o \tilde{T} d\rho'] \ .$$

Now the concept of Hadamard's finite part will be used to carry out the limit $\alpha \rightarrow 0$ for the last equation. The result is

$$\lim_{\alpha\to 0} I_3\left[\int_r^{\tau}\hat{\Phi}_0\hat{T}_1\,dr' + \int_{\alpha\tau}^{\infty}\tilde{\Phi}_0\tilde{T}\,d\rho'\right] \tag{3.26}$$

$$= I_3\left[\fint_r^{\infty}\hat{\Phi}_0\hat{T}\,dr' + \fint_0^{\infty}\tilde{\Phi}_0\tilde{T}\,d\rho'\right] - (\ln\alpha)\, I_3\left[\hat{G}_0(\underline{\varsigma}_1,\theta)\right]$$

where

$$\fint_r^{\infty}\hat{\Phi}_0\hat{T}\,dr' = \lim_{\tau\to 0}\left[\int_r^{\tau}\hat{\Phi}_0\hat{T}\,dr' - (\ln\tau)\,\hat{G}_0(\underline{\varsigma}_1,\theta)\right]$$

$$\fint_0^{\infty}\tilde{\Phi}_0\tilde{T}\,d\rho' = \lim_{\alpha\to 0}\left[\int_{\alpha\tau}^{\tau}\tilde{\Phi}_0\tilde{T}\,d\rho' + (\ln\alpha\tau)\,\hat{G}_0(\underline{\varsigma}_1,\theta)\right]$$

The derivation of equation (3.26) runs parallel to that for equation (3.19) in the last section.

For the rest of the terms on the R.H.S. of equation (3.9), similar results are obtained as follows.

$$I_1\left[\int_{R_b}^{r}\hat{\Phi}\,T_1\,dr'\right] = I_1\left[\int_{R_b}^{r}\hat{\Phi}_0\hat{T}\,dr'\right] \tag{3.27a}$$

$$I_2\left[\int_{r\sin|\phi_1|}^{r}\hat{\Phi}\,T_1\,dr'\right] = I_2\left[\int_{r\sin|\phi_1|}^{r}\hat{\Phi}_0\hat{T}\,dr'\right] \tag{3.27b}$$

$$I_2\left[\int_{r\sin|\phi_1|}^{\tau}\hat{\Phi}\,T_2\,dr' + \frac{1}{\alpha}\int_{\alpha\tau}^{\infty}\tilde{\Phi}\,T_2\,d\rho'\right] \tag{3.27c}$$

$$= I_2\left[\fint_{r\sin|\phi_1|}^{\infty}\hat{\Phi}_0\hat{T}\,dr' + \fint_0^{\infty}\tilde{\Phi}_0\tilde{T}\,d\rho'\right] - (\ln\alpha)\, I_2\left[G_0(\underline{\varsigma}_1,\theta)\right]$$

$$B_i\left[\int_{R_b}^{\tau}\hat{\Phi}\,T_b\,dr' + \frac{1}{\alpha}\int_{\alpha\tau}^{\infty}\tilde{\Phi}\,T_b\,d\rho'\right] \tag{3.27d}$$

$$= \hat{B}_{i0}\left[\fint_{R_b}^{\infty}\hat{\Phi}_0\hat{T}\,dr' + \fint_0^{\infty}\tilde{\Phi}_0\hat{T}\,d\rho'\right] - (\ln\alpha)\,\hat{B}_{i0}\left[\hat{G}_0(\underline{\varsigma}_0;\theta)\right]$$

where

$$B_{io}[g] = \frac{2}{\pi}\int_{-\infty}^{\infty} dc_{z_1}\int_{0}^{\infty} ds_1 \int_{-\Theta_1}^{\Theta_2} d\phi_1 \; \exp(-c_1^2)\, K(\underline{c},\underline{c}_1) \iiint_{c_{n_0}<0} d^3c_0 \; \exp(-c_0^2)\, A_i\, g$$

$$A_1 = \frac{s_1}{s_o}(3 - c_o^2) \; ,$$

$$A_2 = \frac{s_1 c_1^2}{s_o}\left(\frac{c_o^2}{2} - 1\right) \; ,$$

and $R_b$ is a function of $(\phi_1, r, \theta)$ defined by the solution to the simultaneous equations

$$R_b = \mathcal{R}(\theta_b)$$

$$\theta_b = \theta + \phi_1 - \sin^{-1}\left(\frac{r}{R_b}\sin\phi_1\right) \; .$$

Substituting equations (3.26) and (3.27) into (3.9) yields, in the limit $\alpha \rightarrow 0$, the following equations

$$\hat{\sigma}_o = 1 \tag{3.28a}$$

$$\hat{\Phi}_o = \hat{\Psi}_o \tag{3.28b}$$

$$\hat{\sigma}_1 = -\alpha \ln \alpha = \alpha \ln\left(\frac{1}{\alpha}\right) \tag{3.29a}$$

$$\hat{\Phi}_1 = \hat{B}_{1o}[\hat{G}_o(\underline{c}_o;\theta)] + \hat{B}_{2o}[\hat{G}_o(\underline{c};\theta)] + I_3[\hat{G}_o(\underline{c};\theta)] + I_2[\hat{G}_o(\underline{c}_1,\theta)] \; , \tag{3.29b}$$

$$\hat{\sigma}_2 = \alpha \tag{3.30a}$$

and
$$\hat{\Phi}_2(\xi;r,\theta) = \hat{\Psi}_1(\xi;r,\theta) + \sum_{i=1}^{2} B_{i0}\left[\int_{R_b}^{\infty} \hat{\Phi}_0 \hat{T}\, dr' + \int_0^{\infty} \tilde{\Phi}_0 \tilde{T}\, d\rho'\right]$$
$$+ I_1\left[\int_{R_b}^{r} \hat{\Phi}_0 \hat{T}\, dr'\right] + I_3\left[\int_r^{\infty} \hat{\Phi}_0 \hat{T}\, dr' + \int_0^{\infty} \tilde{\Phi}_0 \tilde{T}\, d\rho'\right] \tag{3.30b}$$
$$+ I_3\left[\int_r^{\infty} \hat{\Phi}_0 \hat{T}\, dr' + \int_0^{\infty} \tilde{\Phi}_0 \tilde{T}\, d\rho' + \int_{r\sin|\phi_1|}^{r} \hat{\Phi}_0 \hat{T}\, dr'\right]$$

Equations (3.28) are the result of free-molecule solution and thus ensure the self-consistency of the theory. Equations (3.29) and (3.30) give the first and second order inner solutions.

After these functions have been obtained, it is then possible to go to the next order outer solution, which in turn can be used to obtain the next order inner solution. By continuing this procedure, the inner and outer solutions can be obtained, at least in principle, to all orders. In this connection, most of the difficulties are due to higher order asymptotic expansions for known functions. Because of difficulties of this sort, to find the inner and outer solutions to orders higher than what have been obtained, it becomes necessary to divide the velocity space into several regions and to treat each region properly. The difficulties are mainly caused by the persistence of molecular velocity and the slow molecules. However, no attempt is made here to carry out the higher order analysis.

The zeroth order inner solution $\hat{\Phi}_0$ agrees with the zeroth order outer solution in a region where $r \gg 1$ and $\alpha r \ll 1$. This region may be called the overlap region. From the derivation of (3.29) it is clear that $\hat{\Phi}_1$ is produced by the collisions in the overlap region. The fact that $\hat{\sigma}_1\hat{\Phi}_1$ is of a higher order than $\hat{\sigma}_2\hat{\Phi}_2$ may be attributed to two features of the overlap region, namely (i) the overlap region is of considerable extent, and (ii) molecules produced by collisions in the overlap region have little chance of suffering a collision when they travel to a point in the inner region.

## III.5. Aerodynamic Forces

With the results obtained in the last two sections, asymptotic expansions for the distribution function f can be easily calculated from equations (2.15) and macroscopic quantities of aerodynamic interest can be obtained by integrations over the velocity space. For example, the normal pressure at a point $(a,\theta)$ on the surface of the body (see Fig. 4) may be computed according to the following formula:

$$P_n = \frac{n_0 m (2RT)}{(\pi)^{3/2}} \iiint e^{-(\underline{c}-\underline{U})^2} c_n^2 (1+f)\, d^3c \tag{3.31}$$

$$= \rho_0 R T_0 + \frac{2\rho_0 R T_0}{\pi^{3/2}} \iiint e^{-c^2} c_n^2 f\, d^3c$$

And it will be assumed without loss of generality that the velocity space at $(a,\theta)$ only consists of region I and region II, such as in the case of a circular cylinder in a uniform flow. For more general body shapes, the presence of region III causes no essential difficulties. For a circular cylinder, $a = 1$, and equation (3.31) may be written as

$$\frac{P_n}{\rho_0 R T_0} - 1 = \frac{2}{\pi^{3/2}} \iiint_{c_n > 0} \exp(-c^2)\, c_n^2 \left[\text{R.H.S. of } (3.15b)\right] d^3c$$

$$+ \frac{2}{\pi^{3/2}} \iiint_{c_n < 0} \exp(-c^2)\, c_n^2 \left[\text{R.H.S. of } (3.15a)\right] d^3c$$

If the inner and outer solutions are substituted into (3.15a) and (3.15b), the last equation becomes

$$\frac{P_n}{\rho_0 R T_0} - 1 = -\frac{2}{\sqrt{\pi}}\left(\frac{9\pi}{32} + 1\right) U \cos\theta_n \tag{3.32}$$

$$+ \frac{\alpha}{\pi} \left\langle \frac{c^2}{4} - \frac{7}{4} + \frac{2}{\sqrt{\pi}} c_n^2 \,\middle|\, \int_1^{\tau} \hat{\Phi}_0 \hat{T}\, dr' + \int_{\alpha\tau}^{\infty} \tilde{\Phi}_0 \tilde{T}\, d\rho' \right\rangle$$

where

$$\langle h | g \rangle = \iiint_{c_n < 0} h g \exp(-c^2)\, d^3c$$

Again by using the concept of finite part, the limiting process $\alpha \to 0$ can be carried out for equation (3.32). The result is

$$\frac{P_n}{\rho_0 R T_0} - 1 = -\frac{2}{\sqrt{\pi}}\left(\frac{9\pi}{32} + 1\right) U \cos\theta_n \tag{3.33}$$

$$- \frac{\alpha}{\pi}(\ln\alpha) \left\langle \frac{c^2}{4} - \frac{7}{4} + \frac{2}{\sqrt{\pi}} c_n^2 \,\middle|\, \hat{G}_0(\xi, \theta) \right\rangle$$

$$+ \frac{\alpha}{\pi} \left\langle \frac{c^2}{4} - \frac{7}{4} + \frac{2}{\sqrt{\pi}} c_n^2 \,\middle|\, \int_1^{\infty} \hat{\Phi}_0 \hat{T}\, dr' + \int_0^{\infty} \tilde{\Phi}_0 \tilde{T}\, d\rho' \right\rangle.$$

Similar results can be obtained for the tangential stress $P_t$ at $(1,\theta)$. In fact,

$$\frac{P_n}{\rho_0 R T_0} - 1 = -\frac{U}{\pi}\sin\theta_n + \frac{2\alpha}{\pi}\ln(\alpha)\left\langle c_n c_t \,\middle|\, \hat{G}_0(\underline{c},\theta)\right\rangle \tag{3.34}$$

$$+ \frac{2\alpha}{\pi}\left\langle c_n c_t \,\middle|\, \int_1^\infty \hat{\Phi}_0 \hat{T}\, dr' + \int_0^\infty \tilde{\Phi}\tilde{T}\, d\rho' \right\rangle .$$

With these results, the drag can be computed according to the formula

$$D = -\int_0^{2\pi} (P_n \cos\theta_n + P_t \sin\theta_n)\, d\theta .$$

For a circular cylinder $\theta_n = \theta$, and the expression for D can be written more explicitly as

$$D = D_{fM} + \alpha\, \ln\left(\frac{1}{\alpha}\right) D_1 + \alpha D_2 ,$$

where

$$D_{fM} = \left[2\sqrt{\pi}\left(\frac{9\pi}{32} + 1\right) + 1\right] U$$

$$D_1 = \frac{-1}{\pi}\int_0^{2\pi} \left\langle w(\underline{c};\theta) \,\middle|\, \hat{G}_0(\underline{c};\theta)\right\rangle d\theta$$

$$D_2 = \frac{-1}{\pi}\int_0^{2\pi} \left\langle w(\underline{c};\theta) \,\middle|\, \int_1^\infty \hat{\Phi}_0 \hat{T}\, dr' + \int_0^\infty \tilde{\Phi}_0 \tilde{T}\, d\rho' \right\rangle d\theta$$

and

$$w(\underline{c};\theta) = \frac{2}{\sqrt{\pi}} c_n c_t \sin\theta + \left(\frac{c^2}{4} - \frac{7}{4} + \frac{2}{\sqrt{\pi}} c_n^2\right)\cos\theta .$$

Again it is noted that the first order correction term $D_1$ is due to the collisional effects in the overlap region where the inner and outer solutions match asymptotically. It is also noted that $D_1$ can be calculated by Willis' integral iteration method. For practical purposes, the number $\ell n(1/\alpha)$ may not be very large and therefore for reasonable accuracy it may need to take the combination $\alpha\, \ell n(1/\alpha)D_1 + \alpha D_2$, instead of $\alpha\, \ell n(1/\alpha)D_1$, to account for the collisional effects. In such circumstances, $\tilde{\underline{\Phi}}_o$ has to be computed numerically to give the result. All that has been said in this paragraph regarding the drag D is, of course, true for general two-dimensional flows and is not restricted to flows past a circular cylinder.

## III.6. Question of the Mathematical Foundation

It is perhaps clarifying to point out here the logical implications of what has been done in the last two sections. The results therein may be summarized in the following statement.

Statement A. If, for $\hat{\underline{\Phi}}$ and $\tilde{\underline{\Phi}}$ there exist asymptotic expansions of the type $\Sigma\, \hat{\sigma}_n(\alpha)\, \hat{\underline{\Phi}}_n(\underline{c};r,\theta)$ and $\Sigma\, \tilde{\sigma}_n(\alpha)\, \tilde{\underline{\Phi}}_n(\underline{c};\rho,\theta)$ satisfying conditions (3.3) and (3.4) with the property that $\hat{\underline{\Phi}}_n/\hat{\underline{\Phi}}_o$ and $\tilde{\underline{\Phi}}_n/\tilde{\underline{\Phi}}_o$ are uniformly bounded in $r < \tau$ and $\rho > \alpha\tau$

respectively, and if $\hat{\sigma}_o \hat{\Phi}_o$ is the free-molecule solution, then the functions $\hat{\sigma}_n$, $\tilde{\sigma}_n$, $\hat{\Phi}_n$, and $\tilde{\Phi}_n$ can be obtained by the procedures described in sections III.3 and III.4, and in particular, for two-dimensional problems,

(i) $\hat{\sigma}_o = 1$, $\hat{\sigma}_1 = \alpha \ln(1/\alpha)$, and $\hat{\sigma}_2 = \alpha$

(ii) $\hat{\Phi}_1$ = R.H.S. of equation (3.29b)

(iii) $\hat{\Phi}_2$ = R.H.S. of equation (3.30b), and

(iv) $\tilde{\Phi}_o$ is the solution to equations (3.21) and (3.22).

There are two conditions in Statement A, namely (a) for $\hat{\Phi}$ and $\tilde{\Phi}$ there exist uniformly asymptotic expansions of the type $\Sigma \hat{\sigma}_n \hat{\Phi}_n$ and $\Sigma \tilde{\sigma}_n \tilde{\Phi}_n$ satisfying conditions (3.3) and (3.4), and (b) $\hat{\sigma}_o \hat{\Phi}_o$ is the free-molecule solution to the problem. From a rigorous viewpoint, these two conditions, if true, must be proved as a consequence of the original governing equations (2.16) and (2.17). In most asymptotic theories, this is a very difficult task and in the absence of a proof the conditions (a) and (b), in one form or another, are usually taken together with the existence and uniqueness of the solution as the basic assumptions of the theories. One way to prove conditions (a) and (b) is to verify the converse of Statement A which may be called the Asymptoticity Theorem and is stated as follows.

<u>Asymptoticity Theorem</u>. If the functions $\hat{\sigma}_n$, $\tilde{\sigma}_n$, $\hat{\Phi}_n$, and $\tilde{\Phi}_n$ are obtained by the procedures described in Sections III.3 and III.4, then $\Sigma \hat{\sigma}_n \hat{\Phi}_n$ and $\Sigma \tilde{\sigma}_n \tilde{\Phi}_n$ are respectively the uniformly asymptotic expansions for $\hat{\Phi}$ and $\tilde{\Phi}$ satisfying conditions (3.3) and (3.4).

This theorem, if proved true, together with the existence and uniqueness of the solution to the problem will be sufficient to furnish a mathematical foundation for the asymptotic theory.

Since a proof of the Asymptoticity Theorey has not been bound for the general boundary value problems for the (linearized) Boltzmann equation, it appears desirable to apply the proposed asymptotic theory to a simple problem for which the Asymptoticity Theorem, as well as the uniqueness and existence of the solution, may be rigorously proved. It is hoped that the application to this simple problem will help to illustrate the mathematical nature of the theory. The simple problem which is to be examined in the next two chapters is that of a circular cylinder rotating in an infinite gas which is at rest at infinity. And, since the proposed asymptotic theory is not restricted to the Boltzmann equation, a simpler model equation will be used for the cylinder problem for the sake of further simplicity.

## IV. The Cylinder Problem--Asymptotic Theory

### IV.1. The BGKW Model Equation

The problem to be studied in this and the next chapters is that of a circular cylinder rotating in an infinite gas which is at rest at infinity. For this problem a model equation proposed independently by Bhatnagar et al. (1954) and Welander (1954) is used instead of the Boltzmann equation. This model equation, which may be called the BGKW equation, embodies the assumption that the rate of change of the distribution function F due to collisions is proportional to $F_e$-F, the deviation of F from the local equilibrium value; that is

$$\left.\frac{\partial F}{\partial t}\right)_{coll} = \alpha(F_e - F) ,$$

where

$$F_e = n\left(\frac{1}{2\pi RT}\right)^{3/2} \exp\left\{-\frac{(\underline{\xi}-\underline{q})^2}{2RT}\right\}$$

and $\underline{q}$, T, and n are functions of position only, defined by the following equations

$$n = \iiint F d^3\xi ,$$

$$n\underline{q} = \iiint \underline{\xi}\, F d^3\xi ,$$

and $$nRT = \frac{1}{3}\iiint(\underline{\xi}-\underline{q})^2 F d^3\xi$$

and the proportionality coefficient $\alpha$ is in general also a

function of position. The BGKW equation can then be written as

$$\frac{dF}{dt} = \alpha(F_e - F) \ . \tag{4.1}$$

It is seen from the definitions of $\underline{q}$, T, and n that the conservation laws of matter, momentum and energy are maintained collectively by the collisions. Taking $\alpha$ as the local collisional frequency, the BKGW equation may be derived from the physical argument that the molecules emerging from a collicion adjust themselves instantaneously to the local equilibrium state of the gas because collisions in general randomize the distribution of velocities among the colliding molecules. Although this argument sounds physically plausible a justification of the use of the BGKW equation as an approximation to the Boltzmann equation for some rational molecular model is difficult to arrive at from a rigorous viewpoint. However, since this equation is used here only to help illustrating the nature of the asymptotic theory proposed in the last chapter, a different viewpoint may be taken toward the question of its justification. In this connection, the following known results based on this equation may be cited. The Chapman-Enskog expansion scheme has been applied to this equation for $\alpha \gg 1$, e.g., in Liepmann et al. (1962), and to the zeroth order of $\alpha^{-1}$ yields the Euler equations, which is identical to the results for the Boltzmann equation. The first order results are very similar to those for the Boltzmann equation

although they give an incorrect value of the Prandtl number. For some low-speed linearized gas flows the temperature field is not coupled with the velocity field and the incorrect value of the Prandtl number may not be a serious defect. On the other hand, for $\alpha \ll 1$, the BGKW equation has been used for the linearized Couette flow by Willis (1958) and shows that the macroscopic velocity gradient half-way between the plates is proportional to $\alpha \ln(1/\alpha)$. This result is in agreement with that obtained for the Boltzmann equation for hard spheres, cf. Willis (1961). These are among the few results for which a comparison between the BGKW equation and the Boltzmann equation for some molecular models is available, and they seem to indicate that the BGKW equation is a qualitatively reasonable approximation to the Boltzmann equation, at least for the linearized flow. This indication also seems to have been reinforced by the results of Gross and Jackson (1959).

The linearized Boltzmann equation may be written as

$$\frac{df}{dt} = \alpha\left[ \frac{1}{(\pi)^{3/2}} \iiint e^{-c_1^2} k(\underline{c},\underline{c}_1) f \, d^3c_1 - f \right] , \qquad (4.2)$$

where

$$k(\underline{c},\underline{c}_1) = 1 + \frac{2}{3}\left(c^2 - \frac{3}{2}\right)\left(c_1^2 - \frac{3}{2}\right) + 2\, \underline{c},\underline{c}_1 . \qquad (4.3)$$

The notation is identical with that introduced in Chapter II. Equation (4.2) may also be written as the following system of equations.

$$\frac{df}{dt} = \alpha\left\{(\pi)^{-3/2}\left[\frac{n}{n_o} + (c^2 - \frac{3}{2})\frac{T}{T_o} + 2c\cdot\underline{u}\right] - f\right\} \qquad (4.4)$$

$$n = n_o \iiint e^{-c_1^2} f d^3c_1 ,$$

$$T = \frac{2}{3} T_o \iiint e^{-c_1^2} (c_1^2 - \frac{3}{2}) f d^3c ,$$

and

$$\underline{u} = \iiint \underline{c}_1 \cdot e^{-c_1^2} f d^3c_1 .$$

## IV.2. Formulation of the Problem

For the general boundary value problem for a uniform flow past an immersed body, the governing equation can be obtained by substituting equation (4.3) into equation (2.16). However, for the cylinder problem it is much simpler to obtain the governing equation directly without using equation (2.16). For this linearized problem, n and T are second order quantities in the angular speed of rotation, as can be seen by reversing the direction of rotation, and may therefore be neglected. The BGKW equation then becomes

$$\frac{df}{dt} = \alpha[2(\pi)^{-3/2} c\cdot\underline{u} - f] \qquad (4.5)$$

where

$$\underline{u} = \iiint \underline{c}_1 e^{-c_1^2} f d^3c_1 .$$

If the origin of the $(r,\theta)$ coordinate system is placed

at the center of the cross section of the cylinder, the r-component of the mean velocity of the gas vanishes identically as a consequence of the conservation of molecules and the boundary conditions at the cylinder surface and at infinity. Therefore equation (4.5) can further be simplified to

$$c_r \frac{\partial f}{\partial r} + \frac{c_\theta^2}{r} \frac{\partial f}{\partial c_r} - \frac{c_r c_\theta}{r} \frac{\partial f}{\partial c_\theta} + \alpha[2(\pi)^{-3/2} c_\theta r\omega(r) - f] \quad (4.6)$$

where $\alpha$ is a constant inversely proportional to the mean free path of the gas and $\omega(r)$ is the mean angular speed of the gas defined by

$$\omega(r) = \frac{1}{r} \iiint e^{-c^2} f c_\theta d^3c \ . \quad (4.7)$$

The boundary conditions for equation (4.7) are

$$f = 0 \quad \text{as} \quad r \rightarrow \infty, \quad \text{for} \quad c_r < 0 \ , \quad (4.8)$$

and

$$f = 2(\pi)^{-3/2} c_\theta \quad \text{at} \quad r = 1, \quad \text{for} \quad c_r > 0 \ . \quad (4.9)$$

In obtaining the boundary condition (4.9), both the radius and the angular speed of the cylinder have been set to 1 for the sake of simplicity.

Equation (4.6) and equation (2.12a) have the same differential operator for which the characteristic equations are given by (2.13). Along these characteristic curves f may

be integrated in terms of $\omega(r)$, using equation (4.6) with the boundary conditions (4.8) and (4.9). The results are:

For region I ($\pi/2 < |\phi| < \pi$),

$$f = \frac{2\alpha}{\pi^{3/2}} r\sin|\phi| \int_r^\infty \frac{\eta\,\omega(\eta)}{\sqrt{\eta^2 - r^2\sin^2\phi}} \exp\left\{-\frac{\alpha}{s}\left(\sqrt{\eta^2 - r^2\sin^2\phi} - r|\cos\phi|\right)\right\} d\eta, \tag{4.10a}$$

for region II ($|\phi| < \sin^{-1}\frac{1}{r}$),

$$f = \frac{2}{\pi^{3/2}} s\, r\sin|\phi| \exp\left\{-\frac{\alpha}{s}\left(r\cos\phi - \sqrt{1 - r^2\sin^2\phi}\right)\right\} \tag{4.10b}$$

$$+ \frac{2\alpha}{\pi^{3/2}} r\sin|\phi| \int_1^r \frac{\eta\,\omega(\eta)}{\sqrt{\eta^2 - r^2\sin^2\phi}} \exp\left\{-\frac{\alpha}{s}\left(r\cos\phi - \sqrt{\eta^2 - r^2\sin^2\phi}\right)\right\}$$

and for region III ($\sin^{-1}\frac{1}{r} < |\phi| < \frac{\pi}{2}$),

$$f = \frac{2\alpha}{\pi^{3/2}} r\sin|\phi| \int_{r\sin|\phi|}^\infty \frac{\eta\,\omega(\eta)}{\sqrt{\eta^2 - r^2\sin^2\phi}} \exp\left\{-\frac{\alpha}{s}\left(\sqrt{\eta^2 - r^2\sin^2\phi} + r\cos\phi\right)\right\} d\eta \tag{4.10c}$$

$$+ \frac{2\alpha}{\pi^{3/2}} r\sin|\phi| \int_{r\sin|\phi|}^r \frac{\eta\,\omega(\eta)}{\sqrt{\eta^2 - r^2\sin^2\phi}} \exp\left\{-\frac{\alpha}{s}\left(r\cos\phi - \sqrt{\eta^2 - r^2\sin^2\phi}\right)\right\} d\eta$$

where $s = \sqrt{c_r^2 + c_\theta^2}$ and $\phi = \tan^{-1} c_\theta / c_r$.

Substituting equations (4.10) into equation (4.7) gives a linear integral equation for $\omega(r)$. From physical considerations the unknown function $\omega(r)$ will be restricted to be uniformly bounded in r. For such functions, the order of integrations over s, $\phi$, and $\eta$ in the linear integral equa-

tions for $\omega(r)$ may be interchanged according to the Fubini theorem in the Lebesgue integration theory and the result may be written as

$$\omega(r,\alpha) = \Omega(r,\alpha) + \int_1^\infty K(r,\eta;\alpha)\omega(\eta,\alpha)d\eta \tag{4.11}$$

where the dependence of $\omega(r)$ on $\alpha$ has been expressed explicitly and the functions $\Omega(r,\alpha)$ and $K(r,\eta;\alpha)$ are given by

$$\Omega(r,\alpha) = \frac{4}{\pi}\int_0^{\sin^{-1}\frac{1}{r}} J_3\left[\alpha\left(r\cos\phi - \sqrt{1-r^2\sin^2\phi}\right)\right]\sin^2\phi\, d\phi ,$$

$$K(r,\eta;\alpha) = \frac{4\alpha\eta}{\pi}\left\{\int_0^b \frac{\sin^2\phi}{\sqrt{\eta^2-r^2\sin^2\phi}} J_2\left[\alpha\left|r\cos\phi - \sqrt{\eta^2-r^2\sin^2\phi}\right|\right] d\phi \right.$$
$$\left. + \int_{\sin^{-1}\frac{1}{r}}^b \frac{\sin^2\phi}{\sqrt{\eta^2-r^2\sin^2\phi}} J_2\left[\alpha\left(r\cos\phi + \sqrt{\eta^2-r^2\sin^2\phi}\right)\right] d\phi \right\},$$

$$J_n[x] = \int_0^\infty s^n e^{-s^2 - x/s}\, ds$$

$$b = \sin^{-1}\frac{\eta}{r} \qquad \text{for} \quad \eta < r ,$$

$$b = \frac{\pi}{2} \qquad \text{for} \quad \eta > r .$$

The boundary condition at infinity requires that

$$\lim_{r\to\infty} \omega(r,\alpha) = 0 \tag{4.12}$$

The asymptotic theory proposed in Chapter III will be applied to equation (4.11) under the boundary condition (4.12). In the next two sections, the inner and outer solutions will be obtained. That the inner and outer solutions are indeed uniformly valid asymptotic solutions to the problem, as well as the existence and uniqueness of the exact solution, will be proved in the next chapter.

## IV.3. Outer Solutions

As proposed in Chapter III, the physical space is divided into an inner region for $r < \tau$ and an outer region for $r > \tau$, where $\tau \to \infty$ and $\alpha\tau \to 0$ as $\alpha \to 0$. In the inner region $\omega(r,\alpha)$ is denoted by $\hat{\omega}(r,\alpha)$, while in the outer region $\rho = \alpha r$ and $\xi = \alpha\eta$ are used respectively as the independent variable and the variable of integration and $\omega(\frac{\rho}{\alpha}, \alpha)$ is denoted as $\tilde{\omega}(\rho,\alpha)$. The task of the asymptotic theory is to seek the asymptotic solutions $\Sigma\, \hat{\sigma}_n(\alpha)\hat{\omega}_n(r)$ and $\Sigma\, \tilde{\sigma}_n(\alpha)\tilde{\omega}_n(\rho)$ for $\hat{\omega}(r,\alpha)$ and $\tilde{\omega}(\rho,\alpha)$ under the condition $\alpha \ll 1$.

For the function $\tilde{\omega}(\rho,\alpha)$ the governing equation (4.11) and condition (4.12) become respectively

$$\tilde{\omega}(\rho,\alpha) = \Omega(\tfrac{\rho}{\alpha},\alpha) + \int_1^{\tau} K(\tfrac{\rho}{\alpha},\eta;\alpha)\,\hat{\omega}(\eta,\alpha)\,d\eta + \frac{1}{\alpha}\int_{\alpha\tau}^{\infty} K(\tfrac{\rho}{\alpha},\tfrac{\xi}{\alpha};\alpha)\,\tilde{\omega}(\xi,\alpha)\,d\xi \tag{4.13}$$

and

$$\lim_{\rho \to \infty} \tilde{\omega}(\rho,\alpha) = 0 \tag{4.14}$$

Now the asymptotic expansions $\Sigma\, \tilde{\sigma}_n(\alpha)\tilde{\omega}_n(\rho)$ will be derived from (4.13) and (4.14) for $\tilde{\omega}(\rho,\alpha)$ in the outer region $\rho > \alpha\tau$.

The inhomogeneous term $\Omega(\frac{\rho}{\alpha}, \alpha)$ has the following asymptotic expansion, for $\frac{\rho}{\alpha} >> 1$,

$$\Omega\left(\frac{\rho}{\alpha}, \alpha\right) \approx \frac{4\alpha^3}{3\pi\rho^3} J_3[\rho] = \alpha^3 \tilde{\Omega}_0(\rho) \tag{4.15}$$

For the derivation of (4.15), see Appendix III.

The kernels $K(\frac{\rho}{\alpha}, \frac{\xi}{\alpha}; \alpha)$ and $K(\frac{\rho}{\alpha}, \eta;\alpha)$ can be simplified by making use of the fact that $\frac{\rho}{\alpha} > \tau$ and $\tau \to \infty$ as $\alpha \to 0$. For example, in the limit $\alpha \to 0$ $K(\frac{\rho}{\alpha}, \frac{\xi}{\alpha}, \alpha)$ becomes $\alpha\tilde{K}(\rho,\xi)$ where $\tilde{K}(\rho,\xi)$ is independent of $\alpha$. The explicit form of $\tilde{K}(\rho,\xi)$ is

$$\tilde{K}(\rho,\xi) = \frac{4\xi}{\pi}\left\{\int_0^b \frac{\sin^2\phi}{\sqrt{\xi^2-\rho^2\sin^2\phi}} J_2\left[\left|\rho\cos\phi - \sqrt{\xi^2-\rho^2\sin^2\phi}\right|\right] d\phi \right. \tag{4.16}$$

$$\left. + \int_c^b \frac{\sin^2\phi}{\sqrt{\xi^2-\rho^2\sin^2\phi}} J_2\left[\rho\cos\phi + \sqrt{\xi^2-\rho^2\sin^2\phi}\right] d\phi \right\}$$

where

$b = \sin^{-1}\frac{\xi}{\rho}$ for $\xi < \rho$ ,

$b = \frac{\pi}{2}$ for $\xi > \rho$ .

Equation (4.16) can readily be derived from the expression for $K(\frac{\rho}{\alpha}, \frac{\xi}{\alpha}; \alpha)$ by carrying out the limiting process $\alpha \rightarrow 0$.

For the kernel $K(\frac{\rho}{\alpha}, \eta; \alpha)$ it will be assumed that $\eta << \frac{\rho}{\alpha}$. And consequently, in the limit $\alpha \rightarrow 0$,

$$K(\frac{\rho}{\alpha}, \eta; \alpha) = \frac{4\eta\alpha}{\pi}\left\{\int_0^{t_1} \frac{\sin^2\phi}{\sqrt{\eta^2 - \frac{\rho^2}{\alpha^2}\sin^2\phi}} J_2[\rho]\, d\phi \right.$$

$$\left. \int_{t_2}^{t_1} \frac{\sin^2\phi}{\sqrt{\eta^2 - \frac{\rho^2}{\alpha^2}\sin^2\phi}} J_2[\rho]\, d\phi \right\}$$

where $t_1 = \sin^{-1}\frac{\alpha\eta}{\rho}$ and $t_2 = \sin^{-1}\frac{\alpha}{\rho}$, or, more explicitly,

$$K(\frac{\rho}{\alpha}, \eta; \alpha) \approx \frac{2\alpha^4\eta^3}{\rho^3}\left[\pi - \frac{1}{\eta}\sqrt{1-\frac{1}{\eta^2}} + \sin^{-1}\frac{1}{\eta}\right] J_2[\rho] \tag{4.17}$$

It is noted that the condition $\eta << \frac{\rho}{\alpha}$ and therewith equation (4.17) are not valid for the whole outer region, since $\rho$ may approach $\alpha\tau$. Therefore, to use expression (4.17), it is necessary to make the restriction that $\rho \geq \alpha\tau_1$ where $\tau_1(\alpha)$ has the property that $\tau_1 \rightarrow \infty$, $\alpha\tau_1 \rightarrow 0$, and $\tau_1/\tau \rightarrow \infty$ as $\alpha \rightarrow 0$. Since $\omega_n(\rho)$ does not depend on $\alpha$, the validity of each $\omega_n(\rho)$ can be extended to cover the interval $(\tau_1, \tau)$. The rigorous justification of this restriction will become clear in Appendix VI.

Substituting equations (4.15), (4.16), and (4.17) into (4.13) yields the following result:

$$\tilde{\omega}(\rho,\alpha) = \alpha^3 \tilde{\Omega}_0(\rho) + \int_{\alpha\tau}^{\infty} \tilde{K}(\rho,\xi)\tilde{\omega}(\xi,\alpha)\,d\xi \tag{4.18}$$

$$+ \frac{2}{\pi}\frac{\alpha^4}{\rho^3} J_2[\rho] \int_1^{\tau} \eta^3 \left[\pi - \frac{1}{\eta}\sqrt{1-\frac{1}{\eta^2}} + \sin^{-1}\frac{1}{\eta}\right] \hat{\omega}(\eta,\alpha)\,d\eta$$

where $\tilde{\Omega}_0(\rho)$ is defined in (4.15).

To utilize the concept of Hadamard's finite part in carrying out the limiting process $\alpha \to 0$ for equation (4.18) it is necessary to know the behavior of $\hat{\omega}(r,\alpha)$ as $r \to \infty$ and that of $\tilde{\omega}(\rho,\alpha)$ as $\rho \to 0$. It will be assumed that $\hat{\sigma}_0\hat{\omega}_0$ is the free-molecule solution and consequently,

$$\hat{\omega}(r,\alpha) \approx \frac{2}{3\pi r^3} \quad \text{as} \quad r \to \infty,\ \alpha \to 0 \tag{4.19}$$

And if $\tilde{\omega}(\rho,\alpha)$ and $\hat{\omega}(r,\alpha)$ are to match each other asymptotically, it is expected that

$$\tilde{\omega}(\rho,\alpha) \approx \frac{2\alpha^3}{3\pi\rho^3} \quad \text{as} \quad \rho \to 0,\ \alpha \to 0. \tag{4.20}$$

With these results the limiting process $\alpha \to 0$ can be carried out for equation (4.18). It is now clear from equation (4.18) that $\tilde{\sigma}_0(\alpha) = \alpha^3$. Indeed, divided by $\alpha^3$, equation (4.18) becomes, in the limit $\alpha \to 0$,

$$\tilde{\omega}_0(\rho) = \tilde{\Omega}_0(\rho) + \int_0^{\infty} \tilde{K}(\rho,\xi)\tilde{\omega}_0(\xi)\,d\xi \tag{4.21}$$

where $\tilde{\Omega}_0(\rho) = \frac{4}{3\pi}\frac{1}{\rho^3} J_3(\rho)$ .

Equation (4.21) is free of $\alpha$ and therefore $\tilde{\omega}_o(\rho)$ is a function independent of $\alpha$. For this lowest outer solution $\tilde{\omega}_o(\rho)$, the boundary condition (4.14) becomes

$$\lim_{\rho \to \infty} \tilde{\omega}_o(\rho) = 0 \tag{4.22}$$

It will be shown in Chapter V, section V.4 how the existence of a solution to equations (4.21) and (4.22), which approaches $\frac{2}{3\pi}\frac{1}{\rho^3}$ as $\rho \to 0$, can be proved.

With these results for $\tilde{\omega}_o(\rho)$, the first order outer solution $\tilde{\omega}_1(\rho)$ can now be computed by taking $\hat{\sigma}_o\hat{\omega}_o$ to be the free-molecule solution and expanding $\Omega(\frac{\rho}{\alpha}, \alpha)$ and $K(\frac{\rho}{\alpha}, \frac{\xi}{\alpha}; \alpha)$ to a higher order.

## IV.4. Inner Solutions

In the inner region $r < \tau$, equation (4.11) may be written as

$$\hat{\omega}(r,\alpha) = \Omega(r,\alpha) + \int_1^{\tau} K(r,\eta;\alpha)\hat{\omega}(\eta,\xi)d\eta \tag{4.23}$$

$$+ \frac{1}{\alpha}\int_{\alpha\tau}^{\infty} K(r, \frac{\xi}{\alpha}; \alpha)\tilde{\omega}(\xi.\alpha)d\xi$$

where it is recalled that

$$\Omega(r,\alpha) = \frac{4}{\pi}\int_0^{\sin^{-1}\frac{1}{r}} J_3\left[\alpha\left(r\cos\phi - \sqrt{1-r^2\sin^2\phi}\right)\right]\sin^2\phi\, d\phi$$

From the fact that $r < \tau$ in the inner region and $\lim_{\alpha \to 0} \alpha\tau \longrightarrow 0$, it is seen that the argument in the function $J_3$ in the last integral is very small. Asymptotic expansions for the functions $J_n$ with a small argument have been obtained by Abramowitz (1953). The result for $J_3$ is

$$J_3\left[\alpha\left(r\cos\phi - \sqrt{1-r^2\sin^2\phi}\right)\right] = \frac{1}{2} - \frac{\alpha\sqrt{\pi}}{4}\left(r\cos\phi - \sqrt{1-r^2\sin^2\phi}\right)$$
$$+ \frac{\alpha^2}{4}\left(r\cos\phi - \sqrt{1-r^2\sin^2\phi}\right)^2$$
$$-(0.1477)\alpha^3\left(r\cos\phi - \sqrt{1-r^2\sin^2\phi}\right)^3 + O(\alpha^4 \ln\alpha)$$

where the asymptotic symbol capital O has been used, cf. Erdelyi (1956), p.5). Substituting the expansions for $J_3$ into $\Omega(r,\alpha)$, the following expression is obtained:

$$\Omega(r,\alpha) = \hat{\Omega}_0(r) + \alpha\hat{\Omega}_1(r) + \alpha^2\hat{\Omega}_2(r) + O(\alpha^3)\hat{\Omega}_3(r) \qquad (4.24)$$

where

$$\hat{\Omega}_0(r) = \frac{1}{\pi}\left(\sin^{-1}\frac{1}{r} - \frac{1}{r}\sqrt{1-\frac{1}{r^2}}\right)$$

$$\hat{\Omega}_1(r) = -\frac{1}{\pi}\int_0^{\sin^{-1}\frac{1}{r}} \left(r\cos\phi - \sqrt{1-r^2\sin^2\phi}\right)\sin^2\phi\, d\phi$$

$$\hat{\Omega}_2(r) = \frac{1}{\pi}\int_0^{\sin^{-1}\frac{1}{r}} \left(r\cos\phi - \sqrt{1-r^2\sin^2\phi}\right)^2\sin^2\phi\, d\phi$$

$$\hat{\Omega}_3(r) = \int_0^{\sin^{-1}\frac{1}{r}} \left(r\cos\phi - \sqrt{1-r^2\sin^2\phi}\right)^3 \sin^2\phi \, d\phi .$$

and the function $\hat{\Omega}_o(r)$ is the free-molecule solution.

In a similar manner, the kernel $K(r,\eta;\alpha)$ is expanded as follows:

$$K(r,\eta;\alpha) = \alpha\hat{K}_o(r,\eta) + \alpha^2\hat{K}_1(r,\eta) + O(\alpha^3)\hat{K}_2(r,\eta) \qquad (4.25)$$

where

$$\hat{K}_o(r,\eta) = \frac{\eta}{\sqrt{\pi}}\left\{ \int_0^b \frac{\sin^2\phi \, d\phi}{\sqrt{\eta^2 - r^2\sin^2\phi}} + \int_{\sin^{-1}\frac{1}{r}}^b \frac{\sin^2\phi \, d\phi}{\sqrt{\eta^2 - r^2\sin^2\phi}} \right\}$$

$$\hat{K}_1(r,\eta) = \frac{2\eta}{\pi}\left\{ \int_0^b \frac{\left|r\cos\phi - \sqrt{\eta^2 - r^2\sin^2\phi}\right|}{\sqrt{\eta^2 - r^2\sin^2\phi}} \sin^2\phi \, d\phi \right.$$

$$\left. + \int_{\sin^{-1}\frac{1}{r}}^b \frac{\left(r\cos\phi + \sqrt{\eta^2 - r^2\sin^2\phi}\right)}{\sqrt{\eta^2 - r^2\sin^2\phi}} \sin^2\phi \, d\phi \right\}$$

$$\hat{K}_2(r,\eta) = \frac{\eta}{\sqrt{\pi}}\left\{ \int_0^b \frac{\left(r\cos\phi - \sqrt{\eta^2 - r^2\sin^2\phi}\right)^2}{\sqrt{\eta^2 - r^2\sin^2\phi}} \sin^2\phi \, d\phi \right.$$

$$\left. + \int_{\sin^{-1}\frac{1}{r}}^b \frac{\left(r\cos\phi + \sqrt{\eta^2 - r^2\sin^2\phi}\right)^2}{\sqrt{\eta^2 - r^2\sin^2\phi}} \sin^2\phi \, d\phi \right\}$$

and $b = \sin^{-1}\frac{\eta}{r}$, for $\eta < r$

$b = \frac{\pi}{2}$ for $\eta > r$ .

For the kernel $K(r, \frac{\xi}{\alpha}; \alpha)$, again it will be assumed that $r \ll \frac{\xi}{\alpha}$ and as a result,

$$K(r, \frac{\xi}{\alpha}; \alpha) = \frac{4\alpha}{\pi} J_2(\xi)\left(\frac{\pi}{2} - \frac{1}{4r}\sqrt{1-\frac{1}{r^2}}\right) + O(\alpha^2) \tag{4.26}$$

After the results in (4.24), (4.25), and (4.26) have been obtained, the inner solution $\hat{\omega}_n(r)$ and the inner ordering $\hat{\sigma}_n(\alpha)$ can then be calculated from equation (4.23) for n = 0, 1, 2, assuming that on the R.H.S. of equation (4.23) to the lowest order, $\hat{\omega}(\eta,\alpha)$ can be replaced by the free-molecule solution. If these are done, equation (4.23) may be put into the form of

$$\lim_{\alpha\to 0} \frac{\hat{\omega}(r,\alpha) - \hat{\Omega}_0(r)}{\alpha} = \hat{\Omega}_1(r) + \lim_{\alpha\to 0}\int_1^{\tau} K_0(r,\eta)\hat{\Omega}_0(\eta)d\eta \tag{4.27}$$

$$+\left(\frac{\pi}{2} - \frac{1}{4r}\sqrt{1-\frac{1}{r^2}}\right)\lim_{\alpha\to 0}\frac{4\alpha^3}{\pi}\int_{\alpha\tau}^{\infty} J_2[\xi]\tilde{\omega}_0(\xi)d\xi$$

It is recalled that as $\eta \to \infty$, $\hat{\Omega}_0(\eta) \approx 2/(\pi 3\eta^3)$ and $\hat{K}_0(r,\eta) \approx \frac{4}{\pi}\left(\frac{\pi}{2} - \frac{1}{4r}\sqrt{1 - 1/r^2}\right)$ and on the other hand, as $\xi \to 0$, $\tilde{\omega}_0(\xi) \approx 2/3\pi\xi^3$. Consequently,

$$\lim_{\alpha\to 0}\int_1^{\tau} \hat{K}_0(r,\eta)\hat{\Omega}_0(\eta)d\eta = \int_1^{\infty} \hat{K}_0(r,\eta)\hat{\Omega}_0(\eta)d\eta$$

which is a finite quantity, and

$$\lim_{\alpha\to 0} \alpha^3 \int_{\alpha\tau}^{\infty} J_2[\xi]\tilde{\omega}_0(\xi)d\xi = 0$$

With these results obtained, it is clear from equation (4.27) that

$$\hat{\sigma}_1(\alpha) = \alpha \ ,$$

and

$$\hat{\omega}_1(r) = \hat{\Omega}_1(r) + \int_1^\infty \hat{K}_o(r,\eta)\hat{\Omega}_o(\eta)d\eta \ ,$$

For the convenience of obtaining the second order inner solution $\omega_2(r)$, equation (4.23) is arranged in the following form.

$$\frac{\hat{\omega}(r,\alpha) - \hat{\Omega}_o(r) - \alpha\hat{\omega}_1(r)}{\alpha^2} = \hat{\Omega}_2(r) + \frac{1}{\alpha}\int_1^\tau \hat{K}_o(r,\eta)\hat{\Omega}_o(\eta)d\eta \tag{4.28}$$

$$- \frac{1}{\alpha}\int_1^\infty \hat{K}_o(r,\eta)\hat{\Omega}_o(\eta)\,d\eta + \int_1^\tau \hat{K}_o(r,\eta)\,\hat{\omega}_1(\eta)d\eta$$

$$+ \alpha\int_{\alpha\tau}^\infty K(r,\tfrac{\xi}{\alpha};\alpha)\,\tilde{\omega}_o(\xi)d\xi$$

Note that $\hat{\omega}_1(\eta) \approx 1/\eta_2$ as $\eta \to \infty$, and therefore the integral

$$\lim_{\alpha\to 0}\int_1^\tau \hat{K}_o(r,\eta)\hat{\omega}_1(\eta)d\eta = \int_1^\infty \hat{K}_o(r,\eta)\,\hat{\omega}_1(\eta)d\eta$$

converges. It should also be noted that

$$\lim_{\alpha\to 0}\left[-\frac{1}{\alpha}\int_\tau^\infty \hat{K}_o(r,\eta)\hat{\Omega}_o(\eta)d\eta + \alpha\int_{\alpha\tau}^\infty K(r,\tfrac{\xi}{\alpha};\alpha)\,\tilde{\omega}(\xi)d\xi\right] = 0$$

Equation (4.28) then yields, in the limit $\alpha \to 0$,

$$\hat{\omega}_o(r) = \hat{\Omega}_2(r) + \int_0^\infty K_o(r,\eta)\omega_1(\eta)d\eta$$

$$\hat{\sigma}_2(\alpha) = \alpha^2 \ .$$

Higher order inner and outer solutions can be obtained by making alternate use of equations (4.23) and (4.13).

In the next chapter, it is shown that inner and outer solutions are indeed uniformly valid asymptotic to $\hat{\omega}(r,\alpha)$ and $\tilde{\omega}(\rho,\alpha)$.

# V. The Cylinder Problem--Mathematical Foundation

## V.1. Introduction

The main purpose of this chapter is to prove the Asymptoticity Theorem, i.e., to prove that the inner and outer solutions obtained in the last chapter are indeed uniformly asymptotic to the true solution to the cylinder problem. For this purpose, some preliminary results are obtained in sections V.2, V.3, and V.4. After these results are obtained, the Asymptoticity Theorem can be proved in V.5.

The uniqueness and existence of the solution to the cylinder problem, which are proved in sections V.2 and V.3, are not only indispensable for the proof of the Asymptoticity Theorem, but are also of interest in their own right.

## V.2. The Uniqueness Theorem

For the rotating cylinder in an infinite gas, which is at rest at infinity, the mathematical problem is to find a function $\omega(r,\alpha)$, uniformly bounded in $1 \leq r < \infty$, which satisfies equations (4.11) and (4.12). The uniform boundedness condition is probably the least restrictive one and yet is sufficient to yield the desired results. For example, if $\omega(r,\alpha)$ is uniformly bounded for $r \in [1,\infty)$ then $\omega(r,\alpha)$ is continuous in r. In fact, a stronger result has been obtained

in the following lemma.

<u>Lemma 5.1</u>. If $\omega(r,\alpha)$ is a function uniformly bounded in $1 \leq r < \infty$ and satisfies equation (4.11), then for $r_1 \in [1,N]$ and $r_2 \in [1,N]$ there exist $M(N)$ and $\delta(N)$ such that $|r_1 - r_2| < \delta(N)$ implies $|\omega(r_1,\alpha) - \omega(r_2,\alpha)| < M(N)|r_1 - r_2|^{1/2}$.

The proof of this lemma involves straightforward but lengthy computations and is given in Appendix IV. A result of this lemma is that $\omega(r,\alpha)$ is continuous in $[1,N]$ for any N. Using this result the uniqueness theorem can be proved for the cylinder problem. In the sequel frequent use will be made of the following properties of the kernel $K(r,\eta;\alpha)$, namely

$$K(r,\eta;\alpha) > 0 \tag{5.1}$$

and

$$\int_1^N K(r,\eta;\alpha)d\eta = 1 - [\Omega(r,\alpha) + \Gamma(r,\alpha;N)] , \tag{5.2}$$

where

$$\Gamma(r,\alpha;N) = \frac{4}{\pi}\int_0^{\pi/2} J_3\left[\alpha\left(\sqrt{N^2 - r^2\sin^2\phi} - r\cos\phi\right)\right]\sin^2\phi\, d\phi$$
$$+ \frac{4}{\pi}\int_{\sin^{-1}\frac{1}{r}}^{\pi/2} J_3\left[\alpha\left(\sqrt{N^2 - r^2\sin^2\phi} + r\cos\phi\right)\right]\sin^2\phi\, d\phi .$$

and consequently, for any finite $r_0$,

$$\max_{1\leq r\leq r_0}\int_1^N K(r,\eta;\alpha)d\eta < \max_{1\leq r\leq r_0}\int_1^\infty K(r,\eta;\alpha)d\eta = k(r_0) < 1 \tag{5.3}$$

With the result in inequality (5.3), the uniqueness theorem can be proved as follows.

<u>Theorem 5.1 (Uniqueness).</u> If $v_1(r,\alpha)$ and $v_2(r,\alpha)$ are two functions uniformly bounded in $1 \leq r < \infty$ and satisfy equations (4.11) and (4.12), then $v_1(r,\alpha) \equiv v_2(r,\alpha)$.

<u>Proof</u>. Let $v(r,\alpha) = v_1(r,\alpha) - v_2(r,\alpha)$ and $\|v\| = \sup_{[1,\infty)} |v(r,\alpha)|$ the least upper bound of $|v(r,\alpha)|$ for $r \in [1,\infty)$. Suppose that $v(r,\alpha) \not\equiv 0$. Then $\|v\| > 0$. Equation (4.12) requires that $|v(r,\alpha)| \longrightarrow 0$ as $r \longrightarrow \infty$. Consequently there exists a finite $r_o$ such that $\|v\| = \max_{1 \leq r \leq r_o} |v(r,\alpha)|$, since $v(r,\alpha)$ is continuous in $[1,r_o]$. And from equation (4.11),

$$v(r,\alpha) = \int_1^\infty K(r,\eta;\alpha)v(\eta,\alpha)d\eta \ ,$$

or

$$|v(r,\alpha)| \leq \|v\| \int_1^\infty K(r,\eta;\alpha)d\eta \ .$$

The last inequality is valid for all r in $[1,\infty)$ and in particular for r in $[1,r_o]$. Taking the maximum value of $|v(r,\alpha)|$ for r $[1,r_o]$ gives

$$\|v\| \leq k(r_o)\|v\| \ ,$$

or

$$(1 - k(r_o))\|v\| = 0$$

which, using (5.3), implies $||v|| = 0$ or $v(r,\alpha) \equiv 0$. This completes the proof.

## V.3. The Existence Theorem and the Theorem of Continuous Dependence

In order to construct a solution to equations (4.11) and (4.12), a sequence of functions $\omega(r,\alpha;N)$ is introduced through the following equations:

$$\omega(r,\alpha;N) = \Omega(r,\alpha) + \int_1^N K(r,\eta;\alpha)\omega(\eta,\alpha;N)d\eta \tag{5.4}$$

Equation (5.4) in fact defines a two-cylinder problem in which an inner cylinder of radius 1 is rotating at an angular speed 1 and an outer cylinder of radius N is at rest. This sequence $\omega(r,\alpha;N)$ with increasing N will be used to approximate $\omega(r,\alpha)$ in the limit $N \rightarrow \infty$. The physical meaning of this approximation is self-evident.

The uniqueness of the solution to equation (5.4) for a given N can be proved in a similar manner as Theorem 5.1. The existence of a solution $\omega(r,\alpha;N)$ to equation (5.4) is a consequence of the Newmann series. In fact,

$$\omega(r,\alpha;N) = \sum_{n=0}^{\infty} \int_1^N K^{(n)}(r,\eta;\alpha)\Omega(\eta,\alpha)d\eta + \Omega(r,\alpha) \tag{5.5}$$

is the solution to (5.4), where

$$K^{(o)}(r,\eta;\alpha) = K(r,\eta;\alpha)$$

$$K^{(n)}(r,\eta;\alpha) = \int_1^N K(r,t;\alpha)K^{(n-1)}(t,\eta;\alpha)dt \ .$$

The convergence of the series in (5.5) follows from the convergence of the geometrical series $\sum_{n=o}^{\infty} [k(N)]^n$.

A number of the properties of $\omega(r,\alpha;N)$ should be noted. It is clear from (5.5) that $\omega(r,\alpha;N) > 0$ because $K(r,\eta;\alpha) > 0$ and $\Omega(r,\alpha) > 0$. The fact that $\omega(r,\alpha) \leq 1$ follows from the observation that

$$[1-\omega(r,\alpha;N)] = \Gamma(r,\alpha;N) + \int_1^N K(r,\eta;\alpha)[1-\omega(\eta,\alpha;N)]d\eta, \tag{5.6}$$

where $\Gamma(r,\alpha;N)$ is defined in (5.2) and $\Gamma(r,\alpha;N) > 0$ for $r \in [1,N]$. For then the function $[1-\omega(r,\alpha;N)]$ can be constructed from the Neumann series and is positive and hence the desired result follows. This result says that $\omega(r,\alpha;N)$ forms an equi-bounded sequence of functions. Finally, it should be noted that $\omega(r,\alpha;N)$ is monotone in N; i.e., $\omega(r,\alpha;N_2) > \omega(r,\alpha;N_1)$ for $1 \leq r \leq N_1$ if $N_2 > N_1$. The proof falls as a result of the following equation defined for $r \in [1,N]$,

$$[\omega(r,\alpha;N_2)-\omega(r,\alpha;N_1)] = \int_{N_1}^{N_2} K(r,\eta;\alpha)\omega(\eta,\alpha;N_2)d\eta$$

$$+\int_{1}^{N_1} K(r,\eta;\alpha)[\omega(\eta,\alpha;N_2)-\omega(\eta,\alpha;N_1)]d\eta \ ,$$

which implies that $[\omega(r,\alpha;N_2)-\omega(r,\alpha;N_1)] > 0$ for $1 \leq r \leq N_1$, since $\int_{N_1}^{N_2} K(r,\eta;\alpha)\omega(\eta,\alpha;N_2)d\eta > 0$.

The following lemma is an immediate consequence of the fact that $\omega(r,\alpha;N)$ is an equi-bounded monotone sequence.

<u>Lemma 5.2</u>. The limit function

$$\omega_{lim}(r,\alpha) = \lim_{N \to \infty} \omega(r,\alpha;N)$$

exists for $r \in [1,\infty)$ and is positive and uniformly bounded by 1.

It can be shown in the following that $\omega_{lim}(r,\alpha)$ satisfies equation (4.11).

<u>Lemma 5.3</u>. The function $\omega_{lim}(r,\alpha)$ satisfies the equation (4.11); i.e.,

$$\omega_{lim}(r,\alpha) = \Omega(r,\alpha) + \int_{1}^{\infty} K(r,\eta;\alpha)\omega_{lim}(\eta,\alpha)d\eta \ .$$

<u>Proof</u>. A limiting process $N \to \infty$ is taken for equation (5.4)

$$\lim_{N \to \infty} \omega(r,\alpha;N) = \Omega(r,\alpha) + \lim_{N \to \infty} \int_{1}^{N} K(r,\eta;\alpha)\omega(\eta,\alpha;N)d\eta$$

and consequently,

$$\omega_{\lim}(r,\alpha) = \Omega(r,\alpha) + \lim_{N \to \infty} \int_1^\infty K(r,\eta;\alpha)\omega^*(\eta,\alpha;N)d\eta \ ,$$

where

$$\begin{aligned} \omega^*(r,\alpha;N) &= \omega(r,\alpha;N) \quad \text{for} \quad 1 \leq r \leq N \\ &= 0 \qquad\qquad\quad \text{for} \quad r > N \ . \end{aligned}$$

Since $K(r,\eta;\alpha)\omega^*(\eta,\alpha;N)$ is dominated by the integrable function $K(r,\eta;\alpha)$, it then follows from Lebesgue dominated convergence theorem that

$$\lim_{N \to \infty} \int_1^\infty K(r,\eta;\alpha)\omega^*(\eta,\alpha;N)d\eta = \int_1^\infty K(r,\eta;\alpha)\omega_{\lim}(\eta,\alpha)d\eta \ .$$

This concludes the proof.

In order to establish the existence theorem for the cylinder problem it remains to prove the following lemma.

<u>Lemma 5.4</u>. $\lim_{r \to \infty} \omega_{\lim}(r,\alpha) = 0.$

The proof of this lemma is a rather complicated affair. To facilitate the method of proof it is useful to develop a lemma for obtaining more refined upper bounds for $\omega(r,\alpha;N)$.

For a function $f(r)$, a particular iterate of $f$ is defined, in $b \leq r \leq N$, as

$$I\{f\} = \Omega(r,\alpha) + \int_1^b K(r,\eta;\alpha)\omega(\eta,\alpha;N)d\eta \tag{5.7}$$

$$+ \int_b^N K(r,\eta;\alpha)f(\eta)d\eta \ ,$$

where $1 \leq b \leq N$. This lemma for obtaining more refined upper bounds of $\omega(r,\alpha;N)$ may be stated as follows.

<u>Lemma 5.5</u>. If, for some $\varepsilon \geq 0$, a function $f(r)$ has the properties that

(i) $I\{f\} \leq f(r)$ for $b + \varepsilon \leq r \leq N$, and

(ii) $f(r) \geq \omega(r,\alpha;N)$ for $b \leq r \leq b + \varepsilon$,

then $f(r) \geq \omega(r,\alpha;N)$ for $b \leq r \leq N$.

<u>Proof</u>. For $r \in [b,N]$,

$$I\{f\} - \omega(r,\alpha;N) = \int_b^N K(r,\eta;\Omega)[f(\eta)-\omega(\eta,\alpha;N)]d\eta \ .$$

Hence, for $r \in [b+\varepsilon,N]$, it follows from condition (i) that

$$f(r) - \omega(r,\alpha;N) \geq \int_b^N K(r,\eta;\alpha)[f(\eta)-\omega(\eta,\alpha;N)]d\eta \ ,$$

which may be written as

$$f(r) - \omega(r,\alpha;N) \geq m \int_{b+\varepsilon}^N K(r,\eta;\alpha)d\eta$$

$$+ \int_b^{b+\varepsilon} K(r,\eta;\alpha)[f(\eta)-\omega(\eta,\alpha;N)]d\eta$$

where

$$m = \min_{b+\varepsilon, N} [f(r) - \omega(r,\alpha;N)] .$$

From the second property of $f(r)$, it follows that

$$m \geq m \int_{b+\varepsilon}^{N} K(r,\eta;\alpha)d\eta ,$$

which implies $m(1-\mathcal{K}(N)) \geq 0$ or $m \geq 0$, and consequently,

$$f(r) - \omega(r,\alpha;N) \geq 0 \quad \text{for} \quad r \in [b,N].$$

This completes the proof.

As a special case for $b = 1$, $\varepsilon = 0$, Lemma 5.5 reduces to a theorem of Snyder, cf. De Marcus (1957).

Using Lemma 5.5 it can be shown in Appendix V that $f(r) = c/r$ is an upper bound of $\omega(r,\alpha;N)$ for all $N$ and $\alpha$, where $c$ is a constant independent of $N$. It then implies that $\lim_{r \to \infty} \omega_{lim}(r,\alpha) = 0$, which is Lemma 5.4.

The results of Lemmas 5.3 and 5.4 can be summarized in the following existence theorem.

<u>Theorem 5.2 (Existence)</u>. There exists a solution $\omega_{lim}(r,\alpha)$ to equations (4.11) and (4.12).

It is seen from Theorem 5.1 that $\omega_{lim}(r,\alpha) = \omega(r,\alpha)$.

After the uniqueness and existence theorems are established, it becomes a simple matter to show that the solution

$\omega(r,\alpha)$ to the cylinder problem depends continuously on the boundary term $\Omega(r,\alpha)$. A more precise statement can be given in the following.

<u>Theorem 5.3 (Continuous Dependence)</u>. If the function $g(r,\alpha)$ satisfies, for $0 < \varepsilon < 1$,

$$g(r,\alpha) = G(r,\alpha) + \int_1^\infty K(r,\eta;\alpha)g(\eta,\alpha)d\eta \ ,$$

where

$$|G(r,\alpha) - \Omega(r,\alpha)| < \varepsilon\Omega(r,\alpha),$$

then

$$|g(r,\alpha) - \omega(r,\alpha)| < \varepsilon\omega(r,\alpha).$$

<u>Proof</u>. Let the functions $e(r,\alpha)$ and $E(r,\alpha)$ be defined as

$$e(r,\alpha) = g(r,\alpha) - \omega(r,\alpha)$$

$$E(r,\alpha) = G(r,\alpha) - \Omega(r,\alpha).$$

Then, $e(r,\alpha)$ satisfies the following equation.

$$e(r,\alpha) = E(r,\alpha) + \int_1^\infty K(r,\eta;\alpha)e(\eta,\alpha)d\eta.$$

And, according to theorems 5.1 and 5.2, there exists a unique solution to (5.8) defined by

$$e(r,\alpha) = \lim_{N\to\infty}\left\{\sum_{n=0}^{\infty}\int_1^N K^{(n)}(r,\eta;\alpha)E(\eta,\alpha)\,d\eta + E(r,\alpha)\right\}$$

Therefore,

$$\begin{aligned}|e(r,\alpha)| &\leq \lim_{N\to\infty}\left\{\sum_{n=0}^{\infty}\int_1^N K^{(n)}(r,\eta;\alpha)|E(\eta,\alpha)|\,d\eta + |E(r,\alpha)|\right\}\\ &\leq \varepsilon \lim_{N\to\infty}\left\{\sum_{n=0}^{\infty}\int_1^N K^{(n)}(r,\eta;\alpha)\Omega(\eta,\alpha)\,d\eta + \Omega(r,\alpha)\right\}\\ &\leq \varepsilon\,\omega(r,\alpha)\end{aligned}$$

which completes the proof.

In passing, it may be pointed out that all the results obtained in this and the last sections are valid for any arbitrary values of $\alpha$.

## V.4. The Outer Solutions

In the section to follow the powerful Theorem 5.3 will be used to prove that the inner and outer solutions $\Sigma\,\hat{\sigma}_n\hat{\omega}_n$ and $\Sigma\,\tilde{\sigma}_n\tilde{\omega}_n$ are indeed uniformly asymptotic expansions for the solution $\omega(r,\alpha)$ for $\alpha \ll 1$. In order to do this, it is necessary to show that there exist functions $\tilde{\omega}_n$ satisfying the n-th order outer equations. If $\tilde{\omega}_n$ exists, the $\hat{\omega}_n$ can be obtained by quadratures. It is also to be shown that $\tilde{\omega}_n(\rho)$ have the expected asymptotic behavior as

$\rho \to 0$.

One way to show that $\tilde{\omega}_n(\rho)$ exists is to use the Fourier transform technique, cf. Grad (1959) and Sirovich (1960), and prove that the outer equations are equivalent to the Fourier-transformed equations with proper source terms. Then the existence of the solutions to the Fourier-transformed algebraic equations implies the existence of $\tilde{\omega}_n(\rho)$. The behavior of $\tilde{\omega}_n(\rho)$ for $\rho \to 0$ can then be obtained by explicitly evaluating the solutions obtained by the Fourier technique for $\rho \to 0$.

It is, of course, highly desirable to secure a direct proof for the existence of a solution to the outer equations. Although such a direct proof has not been found, it will be indicated in what follows a possible way to arrive at this proof and the difficulties involved therewith. For example, consider equation (4.21) for $\tilde{\omega}_o(\rho)$. If a function $\tilde{h}_o(\rho)$ is introduced through the equation

$$\tilde{\omega}_o(\rho) = \tilde{h}_o(\rho) + \tilde{\Omega}_o(\rho) + \sum_{n=0}^{1} \int_0^\infty \tilde{K}^{(n)}(\rho,\xi)\tilde{\Omega}_o(\xi)d\xi$$

where

$$\tilde{K}^{(o)}(\rho,\xi) = \tilde{K}(\rho,\xi), \text{ and}$$

$$\tilde{K}^{(n)}(\rho,\xi) = \int_0^\infty \tilde{K}(\rho,t)\tilde{K}^{(n-1)}(r,\xi)dt ,$$

then equation (4.21) may be written as

$$\tilde{h}_o(\rho) = \tilde{H}_o(\rho) + \int_0^\infty \tilde{K}(\rho,\xi)\tilde{h}_o(\xi)d\xi \tag{5.10}$$

where

$$\tilde{H}_o(\rho) = \int_0^\infty \tilde{K}^{(2)}(\rho,\xi)\tilde{\Omega}_o(\xi)d\xi \ ,$$

which is uniformly bounded for $0 \leq \rho < \infty$.

The boundary condition (4.22) goes over to

$$\lim_{\rho \to \infty} \tilde{h}_o(\rho) = 0 \tag{5.11}$$

as a consequence of the fact that as $\rho \to 0$,

$$\left(\Omega_o(\rho) + \sum_{n=o}^{1} \int_0^\infty \tilde{K}^{(n)}(\rho,\xi)\tilde{\Omega}_o(\xi)d\xi\right) \to 0 \ .$$

Equation (5.10) is different from equation (4.21) in that the inhomogeneous term $\tilde{H}_o(\rho)$ is uniformly bounded while $\tilde{\Omega}_o(\rho)$ diverges as $\rho \to 0$.

It can be shown in a manner similar to Theorem 5.1 that if there exists a uniformly bounded solution to equations (5.10) and (5.11), then the solution is unique. Furthermore, it can be shown by constructing the Neumann series that there exists a uniformly bounded solution $\tilde{h}_o(\rho,N)$ to the following equation,

$$\tilde{h}_o(\rho,N) = \tilde{H}_o(\rho) + \int_0^N \tilde{K}(\rho,\xi)\tilde{h}_o(\xi,N)d\xi \ . \tag{5.12}$$

If a function $T(\rho)$ can be found such that for $0 \leq \rho \leq \infty$,

$$\tilde{H}_o(\rho) \leq T(\rho) - \int_0^\infty \tilde{K}(\rho,\xi)T(\xi)d\xi \ , \tag{5.13}$$

then, $\tilde{h}_o(\rho,N)$ is equi-bounded and consequently the existence of a uniformly bounded $\tilde{h}_o(\rho)$ to equations (5.10) and (5.11) will follow in a manner similar to the proof of Theorem 5.2. Then $\tilde{\omega}_o(\rho)$ has the expected behavior as $\rho \longrightarrow 0$, as can be seen from the definition of $\tilde{h}_o(\rho)$. However, it has not possible to find the function $T(\rho)$ satisfying (5.13).

## V.5. Uniformly Valid Asymptoticity

In this section the powerful theorem 5.3 is used to prove that the inner and outer solutions obtained in the last chapter are indeed uniformly asymptotic expansions for the solution $\omega(r,\alpha)$ for $\alpha << 1$. It will be assumed that the existence of $\tilde{\omega}_n(\rho)$, which have the expected asymptotic behavior as $\rho \longrightarrow 0$, have been proved in a manner indicated in section V.4.

Consider, for example, the function $g(r,\alpha)$ defined by

$$g(r,\alpha) = \tilde{\sigma}_o(\alpha)\tilde{\omega}_o(\alpha r) \qquad r > \tau \ ,$$

$$= \hat{\sigma}_o(\alpha)\hat{\omega}_o(r) \qquad r < \tau \ .$$

and define

$$e(r,\alpha) = g(r,\alpha) - \omega(r,\alpha)$$

$$E(r,\alpha) = G(r,\alpha) - \Omega(r,\alpha) \ ,$$

where

$$G(r,\alpha) = g(r,\alpha) - \int_1^\infty K(r,\eta;\alpha)g(\eta,\alpha)d\eta \ .$$

In order to prove that for some M,

$$|e(r,\alpha)| < \sqrt{\alpha}\, M\, \omega(r,\alpha) \ , \quad \text{as} \quad \alpha \longrightarrow 0,$$

it is only necessary to show that

$$|E(r,\alpha)| < \sqrt{\alpha}\, M\, \Omega(r,\alpha) \ , \quad \text{as} \quad \alpha \longrightarrow 0, \tag{5.14}$$

for then the desired conclusion follows immediately from Theorem 5.3.

The proof for inequality (5.14) is very lengthy and may be found in Appendix VI. Similar results may be derived for higher order asymptotic solutions by following the method used in Appendix VI, although the proof will become increasingly tedious.

# VI. Discussion

## VI.1. The Asymptotic Theory

A uniformly valid asymptotic theory of nearly free-molecule flow has been developed in Chapter III for the linearized Boltzmann equation for hard-sphere or power-law molecules. In the last two chapters the theory has been successfully applied to the simple cylinder problem based on the BGKW equation and the approximate solutions so obtained have been proved to be asymptotic to the true solution throughout the physical space. The success of such a proof for this specific simple problem may be taken as an indication of the correctness of the general asymptotic theory, although an immediate extension of the method of proof cannot be found to cover the general nearly free-molecule flow problems.

## VI.2. Drag

For a uniform flow past a two-dimensional cylinder of arbitrary, convex cross-section, the aerodynamic drag D is found to be (cf. section III.5),

$$D = D_{f.M.} + \alpha \ln(1/\alpha) D_1 + \alpha D_2 + O(\alpha^2 \ln \alpha) \ . \qquad (6.1)$$

It should be noted that the first order correction $D_1$ is due to the contribution of collisional effects in the tail of the inner region and the beginning part of the outer region. In other words, $D_1$ is caused by the collisional effects in the region where inner and outer solutions overlap. In this overlap region the free-molecule solution is still the lowest order description of the flow field. This may also be seen from the expression for $D_1$, in which the function $\hat{G}_o$ is related to the free-molecule solution $\hat{\Psi}_o$ through the limiting process

$$\hat{G}_o(\underline{c}, \theta) = \lim_{r \to \infty} \left\{ r \, \hat{\Psi}_o(c_z, s, 0; r, \theta + \phi) \right\}$$

It is then concluded that $D_1$ can be calculated by Willis' method and for this purpose only the knowledge of $\hat{\Psi}_o$ is needed.

Both $\hat{\Phi}_o$ and $\tilde{\Phi}_o$ are needed in order to compute the next order correction term $D_2$. The inner solution $\hat{\Phi}_o$ is simply the free-molecule solution $\hat{\Psi}_o$. For the outer solution $\tilde{\Phi}_o$ it is necessary to solve equations (3.21) and (3.22) numerically. While it is true that equations (3.21) and (3.22) may not be much easier to solve numerically than the original problem, i.e., equations (2.16) and (2.17), the advantage of the asymptotic theory lies in the fact that equations (3.21) and (3.22), unlike equations (2.16) and (2.17), are independent of the parameter $\alpha$ and can

therefore be solved once for all small $\alpha$.

## VI.3. The Lowest Outer Ordering

One of the most important quantities in the theory is the lowest outer ordering $\tilde{\sigma}_o(\alpha)$ which determines the order of magnitude of the outer region effects on the aerodynamic forces. It appears therefore worthwhile to examine the physical origin of this outer ordering without going through the whole mathematical structure of the theory. Consider a two-dimensional problem in which the mean free path $1/\alpha$ is used as the length scale. To the outer solution $\tilde{\Phi}$, the contribution due to the inner solution can be neglected in comparison with that due to molecules coming directly from the boundary of the body. Therefore, to the lowest order, the outer field is created entirely by the boundary contribution as viewed from a distance much larger than the body dimension away from the body, i.e., $\rho \geq \alpha\tau$. Then in the limit $\alpha \rightarrow 0$, the outer flow field is created by a source at the origin which now is the only quantity in the problem which involves $\alpha$.

Because of the linearity of the problem, the magnitude of the outer field depends solely on the strength of the source. The lowest order expression for the source term may be obtained for hard-sphere molecules as follows.

$$\lim_{\alpha\to 0}\Psi(\underline{c};\tfrac{\rho}{\alpha},\theta;\alpha)=\lim_{\alpha\to 0}\int_{-\infty}^{\infty}dc_1\int_0^{\infty}ds_1\int_{-\Theta}^{-\Theta}d\phi\, s_1\left[c_1+\frac{\sqrt{\pi}}{4}\left(1+\frac{c_1^2}{2}\right)\right](-2U) \tag{6.2}$$

$$\times\exp\left\{-\frac{\alpha U}{s_1}\left(r\cos\phi_1-\sqrt{R_b^2-r^2\sin^2\phi}\right)\right\}K(\underline{c},\underline{c}_1)$$

$$\approx -\frac{\alpha U}{\rho}\tilde{\Psi}_0(\underline{c};\rho,\theta)$$

which determines the outer ordering $\tilde{\sigma}_0(\alpha) = \alpha$.

Note that the $\alpha/\rho$ dependence is of a <u>purely geometrical</u> nature, resulting from the $\phi$ integrating in (6.2) where the angles $\Theta_1$ and $\Theta_2$ subtended by the body at $(\rho,\theta)$ are both of the order of $\alpha/\rho$.

## VI.4. Three-dimensional Problems

In view of the geometrical nature of the lowest outer ordering $\tilde{\sigma}_0(\alpha)$ the order of magnitude of the outer solution may be estimated for three-dimensional problems without going through a detailed mathematical analysis. Since the angles subtended by a three-dimensional body is of the order $\alpha^2/\rho^2$, the lowest outer ordering $\tilde{\sigma}_0(\alpha)$ will be $\alpha^2$. From this, together with the fact that the free molecule solution decays as $1/r^2$ at large r, it may be concluded that the drag in a three-dimensional problem has the expression

$$D = D_{fM} + \alpha D_1 + \alpha^2 \ln(1/\alpha) D_2 + \alpha\, D_3$$

where $D_1$ and $D_2$ are entirely due to the collisional effects in the inner region and may be computed by Willis' iteration method. For the next order correction $D_3$, again $\tilde{\Phi}_o$ must be obtained by solving the corresponding equations numerically.

## VI.5. Non-Linear Problems

Although the analysis in the present study is restricted to linear problems, some of the results may be extended to non-linear cases, provided the body is not cold and $M/k_n \ll 1$. For example, consider a two-dimensional non-linear problem. The flow field outside of a fictitious circle C of radius $\tau_o$ will be of a linear nature provided $\tau_o$ is taken to be very large compared with the body dimension. Then, the asymptotic theory is applicable to the flow problem outside of the fictitious circle C if the correct boundary value can be prescribed on C. The radius $\tau_o$ should be so taken that $\tau_o/\tau \rightarrow 0$, $\tau_o \rightarrow \infty$ as $\alpha \rightarrow 0$. Again the lowest order outer solution $\tilde{\Phi}_o$ may be obtained for $\rho > \alpha\tau$, if the source term $\tilde{\Psi}_o$ is calculated from the correct fictitious boundary condition on C. But, since $\tau/\tau_o \rightarrow \infty$ as $\alpha \rightarrow 0$, then to the lowest order the function $\tilde{\Psi}_o$ can be calculated from the real free-molecule boundary condition on

the body. In this manner, $\tilde{\Phi}_o$ can be determined and has precisely the same form as in the linear problems and it is clear that $\tilde{\sigma}_o(\alpha) = \alpha$. Now the inner solutions cannot be obtained by the linear theory. However, in the inner region for $1 \leq r \leq \tau$, the collisional effects can be considered as a perturbation and Willis' method applies. It must be noted that the former expression for the scattering probability distribution $P(\underline{c},\underline{c}_1;\ D(r,\theta))$ (see section II.3) is not valid for non-linear problems. The usual non-linear free-molecule boundary condition should suffice for the purpose of finding the <u>lowest</u> order outer solution $\tilde{\Phi}_o$. Again, the drag has the expression

$$D = D_{fM} + \alpha\, \ell n(1/\alpha) D_1 + \alpha D_2$$

and $D_1$ can be calculated by quadratures using the tail of the free-molecule solution. To the next order $D_2$ may be computed from $\tilde{\Phi}_o$ and the distribution function $\hat{f}$ in the inner region obtained by Willis' method. Analogous results may be obtained for three-dimensional problems.

In concluding, it must be noted that the condition $M/K_n << 1$ may be too restrictive for high-speed aerodynamic problems. A complete non-linear analysis is necessary to remove this restriction.

## Appendix I. Diffuse Boundary Condition

The scattering probability $P(\underline{c},\underline{c}_1;\ D(r,\theta))$ is derived here for the diffuse re-emission boundary condition.

Let the re-emission distribution function be

$$F_b = n_b\left(\frac{1}{2\pi R T_b}\right)^{3/2} \exp\left\{-\ c^2 \cdot \frac{T_o}{T_b}\right\} \quad c_n > 0\ .$$

Then, the conservation laws can be expressed as

$$\iiint_{c_n>0} F_b c_n\, d^3c = \iiint_{c_n<0} F_M (1+f) c_n\, d^3c$$

$$\iiint_{c_n>0} F_b\, c_n c^2 d^3c = \iiint_{c_n<0} F_M (1+f) c_n c^2 d^3c \tag{I.1}$$

On carrying out some of the integrals and neglecting terms of $U^2$ and the product terms of $\underline{U}$ and f, the above equations become

$$\frac{n_b}{n_o}\sqrt{\frac{T_b}{T_o}} = 1 - \sqrt{\pi}\, U \cos\theta_n + \frac{2}{\pi}\iiint_{c_n<0} e^{-c^2} c_n f\, d^3c$$

$$\frac{n_b}{n_o}\left(\frac{T_b}{T_o}\right)^{\frac{3}{2}} = 1 - \frac{5\sqrt{\pi}}{4} U \cos\theta_n + \frac{2}{\pi}\iiint_{c_n<0} e^{-c^2} c_n \frac{c^2}{2} f\, d^3c \tag{I.2}$$

Let $n_b$ and $T_b$ be linearized according to the following formulae:

$$n_b = n_o(1 + n_b')$$

$$T_b = T_o(1 + T_b') \ .$$

Then equations (I.2) become

$$n_b' + \tfrac{1}{2} T_b' = -\sqrt{\pi}\, U \cos\theta_n + \frac{2}{\pi} \iiint_{c_n<0} e^{-c^2} c_n f \, d^3c$$

and

$$n_b' + \tfrac{3}{2} T_b' = -\frac{5\sqrt{\pi}}{4} U \cos\theta_n + \frac{2}{\pi} \iiint_{c_n<0} e^{-c^2} c_n \frac{c^2}{2} f \, d^3c$$

from which $n_b'$ and $T_b'$ can be determined; in fact

$$n_b' = -\frac{7\sqrt{\pi}}{8} U \cos\theta_n + \frac{2}{\pi} \iiint_{c_n<0} e^{-c^2} \left(\frac{3}{2} - \frac{c^2}{4}\right) c_n f \, d^3c \ ,$$

$$T_b' = -\frac{\sqrt{\pi}}{4} U \cos\theta_n + \frac{2}{\pi} \iiint_{c_n<0} e^{-c^2} \left(\frac{c^2}{2} - 1\right) c_n f \, d^3c \ . \qquad \text{(I.3)}$$

Henceforth,

$$F = n_o \left(\frac{1}{2\pi R T_o}\right)^{\frac{3}{2}} \left(1 + n_b' - \tfrac{3}{2} T_b' + c^2 T_b'\right) e^{-c^2}$$

$$= n_o \left(\frac{1}{2\pi R T_o}\right)^{3/2} \exp\{-(\underline{c} - \underline{U})^2\} \left(1 + n_b' + (c^2 - \tfrac{3}{2}) T_b' - 2\underline{c}\cdot\underline{U}\right)$$

$$= F_M \left[1 + n_b' + (c^2 - \tfrac{3}{2}) T_b' - 2\underline{c}\cdot\underline{U}\right] , \quad c_n > 0$$

$$f = n_b' + (c^2 - \tfrac{3}{2})T_b' - 2\underline{c}\cdot\underline{U}$$

$$= -2\underline{c}\cdot\underline{U} - \frac{\sqrt{\pi}}{2}\left(1+\frac{c^2}{2}\right)U\cos\theta_n$$

$$+ \frac{2}{\pi}\iiint_{c_n<0} e^{-c_1^2}\left(3-c_1^2-c^2+\frac{c^2c_1^2}{2}\right)c_{n_1}\, f\, d^3c\,,$$

$$P(\underline{c},\underline{c}_1;D(r,\theta)) = \frac{2}{\pi}e^{-c^2}\left(3+\frac{c^2c_1^2}{2}-c_1^2-c^2\right)c_{n_1}.$$

Appendix II

Now the asymptotic expansion (3.17) will be derived for $\Psi(\underline{c}; \frac{\rho}{\alpha}, \theta; \alpha)$ in the outer region.

$$\Psi(\underline{c}; \frac{\rho}{\alpha}, \theta; \alpha) = \frac{-2\alpha U}{\rho}\left[k_1(\underline{c}; \rho, \theta; \alpha) + k_2(\underline{c}; \rho, \theta; \alpha)\right] \tag{II.1}$$

where

$$k_i(\underline{c}; \frac{\rho}{\alpha}, \theta; \alpha) = I\left[-\infty, \infty; 0, \infty; K_i(\underline{c}, \underline{c}_1)\exp\left\{-\frac{\nu}{s_1}(\rho\cos\phi_1 - \alpha\rho\cos\beta)\right\}\right]$$

$$I[a, b; c, d; g] = \int_{-\beta_1(\theta)}^{\beta_2(\theta)} d\beta\, B(\beta, \theta)\cos\theta_n \int_a^b dc_{z_1} \int_c^d ds_1 \left[c_1 + \frac{\sqrt{\pi}}{4}\left(1 + \frac{c_1^2}{4}\right)\right] s_1\, g$$

and $K_1(\underline{c}, \underline{c}_1)$ and $K_2(\underline{c}, \underline{c}_1)$ are defined in (2.5).

A number of ordering functions $\Delta_1(\alpha)$ and $\Delta_2(\alpha)$ are chosen with the properties that as $\alpha \to 0$ : $\Delta_1 \to 0$, $\Delta_2 \to \infty$, $\tau/\Delta_2 \to \infty$ and $\Delta_1^2\tau \to \infty$. Then for $s < \Delta_2$, $1/\sqrt{\tau} < s_1 < \tau$, $c_z < \Delta_2$, $c_2 < t$ and $|s - s_1| > \Delta_1$, the kernel $K_2(\underline{c}, \underline{c}_1)$ can be expanded as

$$K_2 \approx K_2(\underline{c}, \underline{c}_1; \phi_1 = 0) = K_{20}(\underline{c}, \underline{c}_1) ,$$

and

$$\exp\left\{-\frac{\nu}{s_1}(\rho\cos\phi_1 - \alpha\rho\cos\beta)\right\} \approx \exp\left\{-\frac{\nu(\underline{c}_1, \phi_1 = 0)}{s_1}\rho\right\}$$

Therefore the function $k_2(\underline{c};\rho,\theta;\alpha)$ may be written as

$$k_2(\underline{c};\rho,\theta;\alpha) \approx I\left[-\tau,\tau;\ \tau^{-\frac{1}{2}},\ s-\Delta_1;\ K_{20}(\underline{c},\underline{c}_1)\exp\left(-\frac{\nu}{s_1}\rho\right)\right] \qquad \text{(II.2)}$$

$$+\ I\left[-\tau,\tau;\ s+\Delta_1,\ \tau;\ K_{20}(\underline{c},\underline{c}_1)\exp\left(-\frac{\nu}{s_1}\rho\right)\right]$$

$$+\ I\left[-\tau,\tau;\ s-\Delta_1,s+\Delta_1;\ K_2(\underline{c},\underline{c}_1)\exp\left\{-\frac{\nu}{s_1}(\rho\cos\phi_1-\alpha\rho\cos\beta)\right\}\right]$$

$$+\ I\left[\tau,\infty;\ 0,\infty;\ K_2(\underline{c},\underline{c}_1)\exp\left\{-\frac{\nu}{s_1}(\rho\cos\phi_1-\alpha\rho\cos\beta)\right\}\right]$$

$$+\ I\left[-\infty,-\tau;\ 0,\infty;\ K_2(\underline{c},\underline{c}_1)\exp\left\{-\frac{\nu}{s_1}(\rho\cos\phi_1-\alpha\rho\cos\beta)\right\}\right]$$

In the limit $\alpha \to 0$, the last three integrals of (II.2) all vanish and the sum of the first two integrals converges to $I[\infty,-\infty;\ 0,\infty;\ K_{20}(\underline{c},\underline{c}_1)e^{-\nu/s_1\rho}]$. As a result, it is obtained that

$$k_2(\underline{c},\rho,\theta;\alpha) \approx k_2(\underline{c},\rho,\theta;0) \ .$$

Similarly, as $\alpha \to 0$,

$$k_1(\underline{c},\rho,\theta;\alpha) \approx k_1(\underline{c},\rho,\theta;0) \ .$$

Summarizing the results gives

$$\Psi(\underline{c};\frac{\rho}{\alpha},\theta;\alpha) \approx \frac{-2\alpha U}{\rho}\left[k_1(\underline{c};\rho,\theta;0)+k_2(\underline{c};\rho,\theta;0)\right]$$

which gives the explicit expression for (3.17) as

$$\tilde{\Psi}_0(\underline{c};\rho,\theta) = 2[k_1(\underline{c};\rho,\theta;0) + k_2(\underline{c};\rho,\theta;0)]$$

The derivations in this appendix can be made rigorous by using inequalities.

Appendix III

The derivation of expression (4.15).

$$\Omega\left(\frac{\rho}{\alpha},\alpha\right) = \frac{4}{\pi}\int_0^{\sin^{-1}\frac{\alpha}{\rho}} J_3\left[\rho\cos\phi - \sqrt{\alpha^2-\rho^2\sin^2\phi}\,\right]\sin^2\phi\, d\phi$$

where $\alpha/\rho \leq 1/\tau$.

$$J_3\left[\rho\cos\phi - \sqrt{\alpha^2-\rho^2\sin^2\phi}\,\right] = \int_0^{\infty} s^3 \exp\left\{-s^2 - \frac{1}{s}\left(\rho\cos\phi - \sqrt{\alpha^2-\rho^2\sin^2\phi}\right)\right\} ds$$

A function $\tau_1(\alpha)$ is introduced with the property that $\lim_{\alpha\to 0} \tau_1 = 0$, $\lim_{\alpha\to 0} \tau/\tau_1 \to \infty$, and $\lim_{\alpha\to 0} \alpha^2/\tau_1\tau = 0$. The integration in $J_3$ will be split into two ranges.

$$J_3\left[\rho\cos\phi - \sqrt{\alpha^2-\rho^2\sin^2\phi}\,\right] = \int_0^{\tau_1} s^3 \exp\left\{-s^2 - \frac{1}{s}\left(\rho\cos\phi - \sqrt{\alpha^2-\rho^2\sin^2\phi}\right)\right\} ds \quad \text{(III.1)}$$

$$+ \int_{\tau_1}^{\infty} s^3 \exp\left\{-s^2 - \frac{1}{s}\left(\rho\sqrt{1-\sin^2\phi} - \sqrt{\alpha^2-\rho^2\sin^2\phi}\right)\right\} ds .$$

The first integral in the last equation is always exponentially small because the condition $\lim_{\alpha\to 0} \tau/\tau_1 = \infty$. And, in the second integral of the last equation the exponential function can be Taylor-expanded. The result is

$$J_3\left[\rho\cos\phi - \sqrt{\alpha^2-\rho^2\sin^2\phi}\,\right] \approx \int_{\tau_1}^{\infty} s^3 \exp\left(-s^2 - \frac{\rho}{s}\right) ds \qquad \text{(III.2)}$$

and consequently in the limit $\alpha \longrightarrow 0$,

$$\Omega\left(\frac{\rho}{\alpha}, \alpha\right) \approx \frac{4}{\pi} \int_0^{\sin^{-1}\frac{\alpha}{\rho}} J_3[\rho] \sin^2\phi \, d\phi$$

$$\approx \frac{4}{3\pi} \frac{\alpha^3}{\rho^3} J_3[\rho].$$

Higher order expansions can be obtained without difficulties by taking more terms in the Taylor expansion for (III.2).

Appendix IV

In this appendix, a proof is given for Lemma 5.1.

Lemma 5.1. If $\omega(r,\alpha)$ is a function uniformly bounded in $1 \leq r < \infty$ and satisfies equation (4.11), then for $r_1 \in [1,N]$, $r_2 \in [1,N]$, and $1 < N < \infty$, there exist $M(N)$ and $\delta(N)$ such that

$$|\omega(r_2,\alpha) - \omega(r_1,\alpha)| < M|r_2-r_1|^{1/2} .$$

Proof. Assume $r_2 > r_1$, and write

$$\omega(r_2,\alpha) - \omega(r_1,\alpha) = \Omega(r_2,\alpha) - \Omega(r_1,\alpha) + I$$

where $I = I_1 + I_2 + I_3 + I_4$,

$$I_1 = \Lambda_2\left[\sin^{-1}\frac{1}{r_2}, \frac{\pi}{2}; r_2\sin\theta, r_2; \omega(\eta); -\right]$$
$$- \Lambda_1\left[\sin^{-1}\frac{1}{r_1}, \frac{\pi}{2}; r_1\sin\theta, r_1; \omega(\eta); -\right]$$

$$I_2 = \Lambda_2\left[0, \frac{\pi}{2}; r_2, \infty; \omega(\eta); -\right]$$
$$- \Lambda_1\left[0, \frac{\pi}{2}; r_1, \infty; \omega(\eta); -\right]$$

$$I_3 = \Lambda_2\left[\sin^{-1}\frac{1}{r_2}, \frac{\pi}{2}; r_2\sin\theta, \infty; \omega(\eta); +\right]$$

$$- \Lambda_1\left[\sin^{-1}\frac{1}{r_1}, \frac{\pi}{2}; r_1\sin\theta, \infty; \omega(\eta); +\right]$$

$$I_4 = \Lambda_2\left[0, \sin^{-1}\frac{1}{r_2}; 1, r_2; \omega(\eta); -\right]$$

$$- \Lambda_1\left[0, \sin^{-1}\frac{1}{r_1}; 1, r_1; \omega(\eta); -\right]$$

and

$$\Lambda_i[a, b; c, d; g(\eta); \pm] = \int_a^b d\theta \int_c^d d\eta \frac{\eta g(\eta)\sin^2\theta}{\sqrt{\eta^2 - r_i^2\sin^2\theta}} J_2\left[\alpha\left|r_i\cos\theta \pm \sqrt{\eta^2 - r_i^2\sin^2\theta}\right|\right]$$

The following results are obtained.

(a) $|I_1| \leq |I_{11}| + I_{12} + I_{13} + I_{14}$ ,

where

$$|I_{11}| = \left|\sum_{i=1}^{2}(-1)^i \Lambda_i^*\left[1, r_i; \sin^{-1}\frac{1}{r_1}, \sin^{-1}\frac{\eta}{r_2}; \omega(\eta); -\right]\right|$$

$$I_{12} = \Lambda_2^*\left[1, r_1; \sin^{-1}\frac{1}{r_2}, \sin^{-1}\frac{1}{r_1}; 1, -\right]$$

$$I_{13} = \Lambda_2^*\left[r_1, r_2; \sin^{-1}\frac{1}{r_2}, \sin^{-1}\frac{\eta}{r_2}; 1, -\right]$$

$$I_{14} = \Lambda_1^*\left[1, r_1; \sin^{-1}\frac{\eta}{r_2}, \sin^{-1}\frac{\eta}{r_1}; 1, -\right]$$

and

$$\Lambda_i^*[a,b;c,d;g(\eta);\pm] = \int_a^b d\eta \int_c^d d\theta \frac{\eta\, g(\eta) \sin^2\theta}{\sqrt{\eta^2 - r_i^2 \sin^2\theta}} J_2\left[\alpha \left| r_i \cos\theta \pm \sqrt{\eta^2 - r_i^2 \sin^2\theta} \right|\right]$$

From the fact that $\omega(\eta) \leq 1$, it can be shown that

$$|I_{11}| < \frac{\pi}{4} J_2(0) \left| r_2^2 - r_1^2 \right|^{1/2} + 2 J_1(0)\, r_2 (r_2^2 - r_1^2)\left(\ln \sqrt{r_2^2 - r_1^2}\right)$$

$$< \pi J_2(0)\, r_2^2 \left| r_2 - r_1 \right|^{1/2}$$

For $I_{12}$, $I_{13}$, and $I_{14}$, it is found that

$$I_{12} < J_2(0) \frac{r_1 + 1}{r_1 r_2} (r_2 - r_1) < 2J_2(0)(r_2 - r_1)$$

$$I_{13} < (r_2 - r_1) J_2(0)(2r_2 + 1)$$

and finally,

$$I_{14} < J_2(0)\left[(2r_2 + 1)(r_2 - r_1) + \pi (r_2^2 - r_1^2)^{1/2} + \frac{r_2 - r_1}{r_1 r_2}\right]$$

$$< (2r_2 + 2\pi) J_2(0) \left| r_2 - r_1 \right|^{1/2}$$

Hence,

$$|I_1| < C_1 r_2^2 J_2(0) |r_2 - r_1|^{1\ 2} ,$$

where the constant $C_1$ is independent of $r_1$ and $r_2$.

(b) $|I_2| < I_{21} + I_{22}$ ,

where

$$I_{21} = \left| \sum_{i=1}^{2} (-1)^i \Lambda_i \left[ 0, \frac{\pi}{2}; r_2, \infty; \omega(\eta); - \right] \right|$$

and

$$I_{22} = \Lambda_1 \left[ 0, \frac{\pi}{2}; r_1, r_2; 1, - \right]$$

It is found that

$$I_{21} < \sqrt{r_2^2 - r_1^2}\, J_2(0) \left[ 6\alpha r_2 + 4 + 3r_2^2 + \frac{3}{\alpha^2} + \frac{2r_2}{\alpha} + 6r_2^2 \right]$$

and,

$$I_{22} < J_2(0)(r_2 - r_1)[2 + r_2 + \ln r_1]$$

And, therefore,

$$|I_2| < M_2 |r_2 - r_1|^{1/2}$$

where $M_2$ is a function of N and $\alpha$.

(c) $|I_3| < I_{31} + I_{32} + I_{33}$ ,

where

$$I_{31} = \left| \sum_{i=1}^{2} (-1)^i \Lambda_i \left[ \sin^{-1}\frac{1}{r_2}, \frac{\pi}{2}; r_2 \sin\theta, \infty; \omega(\eta); + \right] \right|$$

$$I_{32} = \Lambda_2 \left[ \sin^{-1}\frac{1}{r_2}, \sin^{-1}\frac{1}{r_1}; r_2 \sin\theta, \infty; 1; + \right]$$

and

$$I_{33} = \Lambda_1 \left[ \sin^{-1}\frac{1}{r_1}, \frac{\pi}{2}; r_1 \sin\theta, r_2 \sin\theta; 1, + \right]$$

The results are:

$$|I_{31}| < 2r_2 J_2(0) |r_2 - r_1|^{1/2} + \frac{\pi r_2}{2\alpha} J_2(0)(r_2 - r_1)$$

$$< \left[ 2r_2 + \frac{\pi r_2^2}{2\alpha} \right] |r_2 - r_1|^{1/2}$$

and,

$$I_{32} < \frac{J_3(0)}{\alpha} \frac{(r_2 - r_1)}{r_1 r_2}$$

$$I_{33} < \frac{\sqrt{r_2^2 - r_1^2}}{\alpha r_1} J_3(0) .$$

Hence

$$|I_3| < \left[ 2r_2 + \frac{\pi r_2^2}{2\alpha} \right] |r_2 - r_1|^{1/2}$$

(d) $|I_4| < I_{41} + I_{42} + I_{43}$ ,

where

$$I_{41} = \left| \sum_{i=1}^{2} (-1)^i \Lambda^*_i \left[ 1, r_1 ; 0, \sin^{-1}\frac{\eta}{r_2} ; \omega(\eta) ; - \right] \right|$$

$$I_{42} = \Lambda^*_1 \left[ 1, r_1 ; \sin^{-1}\frac{\eta}{r_2}, \sin^{-1}\frac{\eta}{r_1} ; 1, - \right]$$

and,

$$I_{43} = \Lambda^*_2 \left[ r_1, r_2 ; 0, \sin^{-1}\frac{\eta}{r_2} ; 1 ; - \right]$$

The results are found to be:

$$I_{41} < \left[ 10 r_2^2 + \left(1 - \frac{1}{r_2^2}\right) \ln\left(\frac{1+r_2}{r_2-1}\right) + \frac{(r_1 r_2 - 1)}{r_1 r_2} \ln\left(\frac{r_2+1}{r_2^2-1}\right) \right] |r_2 - r_1|^{1/2}$$

$$I_{42} < \left[ 10 r_2 \right] |r_2 - r_1|^{1/2}$$

and

$$I_{43} < \left[ \frac{1}{2} + \sqrt{r_2 - r_1} \ln(r_2 - r_1) \right] J_2(0) \, |r_2 - r_1|^{1/2}$$

Hence

$$|I_4| < M_4(N) |r_2 - r_1|^{1/2}$$

where $M_4(N)$ is a function of N.

Finally, it can easily be shown that

$$|\Omega(r_2,\alpha) - \Omega(r_1,\alpha)| < J_3(0)\,\frac{r_2-r_1}{r_1 r_2}\,.$$

Collecting the results obtained in the above gives

$$|\omega(r_2,\alpha) - \omega(r_1,\alpha)| < M(N,\alpha)|r_2 - r_1|^{1/2}\,,$$

which proves Lemma 5.1.

Appendix V

It will now be proved that $f(r) = c/r$ for some constant $C$ is an upper bound for $\omega(r,\alpha;N)$ for all $N$.

Proof. Consider the difference

$$I\{f\} - f = \Omega(r,\alpha) + \int_1^b K(r_1,\eta;\alpha)\omega(\eta,\alpha;N)d\eta$$

$$- f(b)\Omega_2(r,\alpha) - f(N)\Omega_3(r,\alpha)$$

$$+ T_1 + T_2 + T_3 + T_4$$

where

$$\Omega_2(r,\alpha) = \frac{4}{\pi}\left\{\int_0^{\sin^{-1}\frac{b}{r}} J_3\left[\alpha\left(r\cos\theta - \sqrt{b^2 - r^2\sin^2\theta}\right)\right]\sin^2\theta\, d\theta \right.$$

$$\left. + \int_{\sin^{-1}\frac{1}{r}}^{\sin^{-1}\frac{b}{r}} J_3\left[\alpha\left(r\cos\theta + \sqrt{b^2 - r^2\sin^2\theta}\right)\right]\sin^2\theta\, d\theta \right\}$$

$$\Omega_3(r,\alpha) = \frac{4}{\pi}\int_0^{\pi/2}\left\{J_3\left[\alpha\left(\sqrt{N^2 - r^2\sin^2\theta} - r\cos\theta\right)\right] + J_3\left[\alpha\left(\sqrt{N^2 - r^2\sin^2\theta} + r\cos\theta\right)\right]\right\}$$

$$\times \sin^2\theta\, d\theta$$

$$T_1 = T\left[r, N; \sin^{-1}\tfrac{1}{r}, \pi/2; f'(\eta); +\right]$$

$$T_2 = T\left[r, N; 0, \pi/2; f'(\eta); -\right]$$

$$T_3 = T\left[b, r; \sin^{-1}\frac{\eta}{r}, \sin^{-1}\frac{\eta}{r}; f'(\eta); +\right]$$

$$T_4 = -T\left[b, r; 0, \sin^{-1}\frac{\eta}{r}; f'(\eta); -\right]$$

and,

$$T[a, b; c, d; g(\eta); \pm] = \int_a^b d\eta \int_c^d d\theta\, g(\eta) \sin^2\theta\, J_3\left[\alpha\left|r\cos\theta \pm \sqrt{\eta^2 - r^2\sin^2\theta}\right|\right]$$

If the constant c is such that $f(b) > 1$, then equation (V.1) may be written as an inequality

$$I\{f\} - f \leq \int_1^b (K, r, \eta; \alpha)\omega(\eta, \alpha; N)d\eta - f(N)\Omega_3(r, \alpha)$$

$$+ T_1 + T_2 + T_3 + T_4 \ .$$

It will now be shown that there exist b and $\varepsilon$ such that

$$I\{f\} - f \leq 0 \quad \text{for} \quad b+\varepsilon \leq r \leq N \tag{V.2}$$

and

$$f \geq \omega(r, \alpha; N) \quad \text{for} \quad b \leq r \leq r+\varepsilon$$

Then, it follows from Lemma 5.5 that

$$\omega(r, \alpha; N) \leq f(r) = c/r \ .$$

In order to prove (V.2), the functions $T_i$'s, $i = 1,2,3,4$,

will be evaluated for $r \geq b+\varepsilon$, where $b \gg 1/\alpha$. To this end, it is noted that

$$f'(\eta) = -\frac{c}{\eta^2}$$

and accordingly, $T_1 \leq 0$ and $T_3 \leq 0$ .

Now consider the function $T_2$. With a suitable change of variables, $T_2$ may be written as

$$T_2 = T_{21} + T_{22} ,$$

where

$$T_{21} = -\frac{c}{r}\int_0^{\pi/2}\int_0^{\infty}\int_1^{\infty} \sin^2\theta \exp\left\{-s^2 - \frac{\alpha r}{s}x\right\} \frac{(x+\cos\theta)s^3}{(x^2+2x\cos\theta+1)^{3/2}}\, dx\, ds\, d\theta$$

and $$T_{22} = \frac{c}{r}\int_0^{\pi/2}\int_0^{\infty}\int_{N/r}^{\infty} \sin^2\theta \frac{s^3}{y^2} \exp\left\{-s^2 - \frac{\alpha r}{s}\left(\sqrt{y^2-\sin^2\theta} - \cos\theta\right)\right\} dy\, ds\, d\theta$$

It should be noted that the integral of the function $T_{21}$ contains r only in the exponential function. Therefore, when $\alpha r$ is very large, the asymptotic value of this integral can be evaluated by the Laplace method, cf. Erdelyi (1956). The result is found to be

$$T_{21} = -c\left[\frac{\sqrt{\pi}}{8}\frac{1}{\alpha r^2} + \frac{\pi}{16}\frac{1}{\alpha^2 r^3}\right] + O\left(\frac{1}{\alpha^3 r^4}\right)$$

For $T_{22}$, it can easily be shown that

$$T_{22} < \frac{c}{r}\int_0^{\pi/2}\int_0^{\infty} \frac{r}{N} \exp\left\{-s^2 - \frac{\alpha r}{s}\left(\sqrt{\frac{N^2}{r^2} - \sin^2\theta} - \cos\theta\right)\right\} s^3 \sin^2\theta \, ds \, d\theta$$

$$< f(N)\,\Omega_3(r,\alpha)$$

If $\varepsilon$ is taken to be equal to b, then the Leplace method can be used to evaluate $T_4$. The result is

$$T_4 = +C\left[\frac{\sqrt{\pi}}{8}\frac{1}{\alpha r^2} - \frac{\pi}{16}\frac{1}{\alpha^2 r^3}\right] + O\left(\frac{1}{\alpha^3 r^4}\right),$$

$$\text{for} \quad r \geq b + \varepsilon = 2\varepsilon$$

And for $r \geq 2b$, it can be shown that

$$\int_1^b \omega(\eta,\alpha;N)K(r,\eta;\alpha)\,d\eta \leq \int_1^b K(r,\eta;\alpha)\,d\eta$$
$$\leq O\left(J_2\left[\frac{\alpha r}{4}\right]\right)$$

This result illustrates the necessity of introducing $\varepsilon$ into Lemma 5.5.

Summarizing all the results obtained above implies that there exist b for which $\alpha b \gg 1$ and $\varepsilon = b$, such that

$$I\{f\} - f \leq -\frac{\pi C}{8}\left(\frac{1}{\alpha^2 r^3}\right) + O\left(\frac{C}{\alpha^3 r^4}\right) + O\left(J_2\left[\frac{\alpha r}{4}\right]\right)$$

Henceforth,

$$I\{f\} - f \leq 0 \quad \text{for} \quad r \geq b+\varepsilon = 2b \ .$$

The constant c is taken to be $c = 2b$; then

$$f(r) = c/r > 1 \ , \qquad b \leq r \leq b+\varepsilon = 2b$$

or

$$f(r) > \omega(r,\alpha;N) \qquad \text{for} \qquad b \leq r \leq b+\varepsilon = 2b.$$

Then, according to Lemma 5.5,

$$\frac{2b}{r} \geq \omega(r,\alpha;N) \quad \text{for} \quad b \leq r \leq N.$$

The analysis here is valid for any N, and hence

$$\frac{2b}{r} \geq \omega(r,\alpha;N) \quad \text{for} \quad \text{all } N,$$

or,

$$\frac{2b}{r} \geq \omega_{lim}(r,\alpha) \ ,$$

which implies $\omega_{lim}(r,\alpha) \longrightarrow 0$ as $r \longrightarrow \infty$.

Appendix VI

In this appendix the inequality (5.14) will be proved; that is, for some constant M,

$$|E(r,\alpha)| < \sqrt{\alpha}\, M\, \Omega(r,\alpha) \qquad \text{as} \qquad \alpha \to 0.$$

This will be proved for the outer region and the inner region separately. The function $\tau(\alpha)$ is taken in this proof to be $\alpha^{-1/2}$

(i) In the outer region, $\rho > \alpha\tau$, and

$$E\left(\frac{\rho}{\alpha},\alpha\right) = \alpha^3 \tilde{\omega}_0(\rho) - \Omega\left(\frac{\rho}{\alpha},\alpha\right) - \int_1^\infty K\left(\frac{\rho}{\alpha},\eta;\alpha\right) g(\eta,\alpha)\, d\eta$$

$$= \alpha^3 \tilde{\Omega}_0(\rho) - \Omega\left(\frac{\rho}{\alpha},\alpha\right) + I_1 + I_2 + I_3 + I_4 + I_5$$

where

$$I_1 = \alpha^2 \int_{\alpha\tau}^{\infty} \left[K\left(\frac{\rho}{\alpha},\frac{\xi}{\alpha};\alpha\right) - \alpha \tilde{K}(\rho,\xi)\right] \tilde{\omega}_0(\xi)\, d\xi$$

$$I_2 = \int_1^{\tau_1} K\left(\frac{\rho}{\alpha},\eta;\alpha\right) \hat{\omega}_0(\eta)\, d\eta$$

$$I_3 = \alpha^3 \int_0^{\alpha\tau_1} \tilde{K}(\rho,\xi)\, \tilde{\omega}_0(\xi)\, d\xi$$

$$I_4 = \alpha^3 \int_{\alpha\tau_1}^{\alpha\tau} \tilde{K}(\rho,\xi)\, \tilde{\omega}_0(\xi)\, d\xi$$

$$I_5 = -\int_{\tau_1}^{\tau} K\left(\frac{\rho}{\alpha}, \eta ; \alpha\right) \hat{\omega}_0(\eta)\, d\eta$$

and

$$\tau_1 = \alpha^{-1/4}.$$

From the definitions of $K(r,\eta;\alpha)$ and $\tilde{K}(\rho,\xi)$ it follows that

$$K\left(\frac{\rho}{\alpha}, \frac{\xi}{\alpha} ; \alpha\right) - \alpha \tilde{K}(\rho,\xi) = \frac{\alpha^3}{\rho^3} J_2(\rho+\xi)\left[1 + O\left(\frac{\alpha^2}{\rho^2}\right)\right]$$

and consequently

$$I_1 = \left[1 + O\left(\frac{\alpha^2}{\rho^2}\right)\right] \frac{\alpha^5}{\rho^3}\left[\int_b^{\infty} J_2(\rho+\xi)\tilde{\omega}_0(\xi)\, d\xi + \int_{\alpha\tau}^{b} J_2(\rho+\xi)\tilde{\omega}_0(\xi)\, d\xi\right]$$

$$= O(\alpha^5)\frac{1}{\rho^3}\left[J_3(\rho+\xi) + J_2(\rho)\frac{1}{\alpha^2\tau^2}\right]$$

$$\leq O(\alpha^3)\frac{J_2(\rho)}{\rho^3}\frac{1}{\tau^2}$$

Therefore,

$$I_1 < \sqrt{\alpha}\, M_1 \alpha^3 \Omega_0(\rho) \quad . \qquad \text{(VI 1)}$$

For the integrals $I_2$ and $I_3$, it is noted that $\xi \ll \rho$ and $\eta \ll \rho/\alpha$, and consequently

$$K\left(\frac{\rho}{\alpha}, \eta ; \alpha\right) \sim O(\alpha^4) J_2(\rho)\frac{\eta^3}{\rho^3}$$

and $$\tilde{K}(\rho,\xi) \sim O(1)\,\frac{J_2(\rho)}{\rho^3}\,\xi^3$$

Then, if it is recalled that

$$\hat{\omega}_o(\eta) < c_1/\eta^3 \qquad \text{for some } c_1 \qquad \eta \to \infty$$

$$\tilde{\omega}_o(\xi) < c_2/\xi^3 \qquad \text{for some } c_2\,, \qquad \xi \to 0$$

the following results are obtained for $I_2$ and $I_3$, namely,

$$I_2 = O(\alpha^4)\,\frac{J_2(\rho)}{\rho^3}\int_1^{\tau_1} d\eta \tag{VI.2}$$

$$< O(\alpha\tau_1)\,\frac{\alpha^3 J_2(\rho)}{\rho^3}$$

$$< \sqrt{\alpha}\, M_1\, \alpha^3 \Omega_o(\rho)$$

and

$$I_3 = O(\alpha^3)\,\frac{J_2(\rho)}{\rho^3}\int_0^{\alpha\tau_1} d\xi \tag{VI.3}$$

$$= O(\alpha\tau_1)\,\frac{\alpha^3 J_2(\rho)}{\rho^3}$$

$$< \sqrt{\alpha}\, M_1 \alpha^3 \Omega_o(\rho)\ .$$

For the integrals $I_4$ and $I_5$, the functions $\omega_o(\xi)$, $K(\rho,\xi)$, and $K(\frac{\rho}{\alpha}, \eta, \alpha)$ can be simplified by noting that $\xi \ll 1$ and $\alpha\eta \ll 1$, and the function $\hat{\omega}_o(\eta)$ can be simplified for $\eta \gg 1$. The results are,

$$I_4 = \frac{4\alpha^3}{\pi} \int_{\alpha\tau_1}^{\alpha\tau} \int_0^{\sin^{-1}\frac{\xi}{\rho}} \frac{\xi \sin^2\phi}{\sqrt{\xi^2 - \rho^2 \sin^2\phi}} J_2(\rho\cos\phi) \frac{2}{3\pi\xi^3} \, d\phi \, d\xi$$

$$+ O(\alpha^3) \int_{\alpha\tau_1}^{\alpha\tau} \int_0^{\sin^{-1}\frac{\xi}{\rho}} \frac{\xi \sin^2\phi}{\sqrt{\xi^2 - \rho^2 \sin^2\phi}} J_2(\rho\cos\phi) \frac{1}{\xi^2} \, d\phi \, d\xi$$

$$= I_{41} + O(\alpha^3) I_{42}$$

For $I_{42}$ the order of integrations can be interchanged to obtain the following results:

$$I_{42} = \left\{ \int_0^{\sin^{-1}\frac{\alpha\tau}{\rho}} \sin^2\phi \, J_2[\rho\cos\phi] \left[ \frac{1}{\rho\sin\phi} \cos^{-1}\frac{\rho\sin\phi}{\xi} \right]_{\alpha\tau_1}^{\alpha\tau} d\phi \right.$$

$$\left. + \int_{\sin^{-1}\frac{\alpha\tau_1}{\rho}}^{\sin^{-1}\frac{\alpha\tau}{\rho}} \sin^2\phi \, J_2[\rho\cos\phi] \left[ \frac{1}{\rho\sin\phi} \cos^{-1}\frac{\rho\sin\phi}{\xi} \right]_{\rho\sin\phi}^{\alpha\tau} d\phi \right\}$$

$$= O(1) \frac{J_2\left[\rho\sqrt{1 - \frac{\alpha^2\tau^2}{\rho^2}}\right]}{\rho} \left[ 1 - \sqrt{1 - \frac{\alpha^2\tau^2}{\rho^2}} \right]$$

which, for $\rho \leq \alpha^{1/4}$, reduces to

$$O(\alpha^3) I_{42} < O(\alpha^3) \frac{J_2(\rho)\rho^2}{\rho^3} < \sqrt{\alpha}\, M_1 \alpha^3 \frac{J_2(\rho)}{\rho^3}$$

and for $\rho \geq \alpha^{1/4}$,

$$O(\alpha^3) I_{42} < O(\alpha^3) \frac{J_2(\rho)}{\rho} \left[1 - \left(1 - \frac{1}{2}\frac{\alpha^2\tau^2}{\rho^2}\right)\right]$$

$$< O(\alpha^3) \frac{J_2(\rho)}{\rho^3} \alpha^2\tau^2$$

$$< \sqrt{\alpha}\, M_1 \alpha^3 \Omega_0(\rho) \ .$$

For $I_5$, the results are

$$I_5 = -\frac{8\alpha}{3\pi^2} \int_{\tau_1}^{\tau} \left\{ \int_0^{\sin^{-1}\frac{\alpha\eta}{\rho}} + \int_{\sin^{-1}\frac{\alpha}{\rho}}^{\sin^{-1}\frac{\alpha\eta}{\rho}} \right\} \frac{\eta \sin^2\phi}{\sqrt{\eta^2 - \frac{\rho^2}{\alpha^2}\sin^2\phi}} \frac{J_2[\rho\cos\phi]}{\eta^3} d\phi\, d\eta$$

$$+ O(\alpha) \int_{\tau_1}^{\tau} \left\{ \int_0^{\sin^{-1}\frac{\alpha\eta}{\rho}} + \int_{\sin^{-1}\frac{\alpha}{\rho}}^{\sin^{-1}\frac{\alpha\eta}{\rho}} \right\} \frac{\eta \sin^2\phi}{\sqrt{\eta^2 - \frac{\rho^2}{\alpha^2}\sin^2\phi}} J_2[\rho\cos\phi] \frac{1}{\eta^4} d\phi\, d\eta$$

$$= I_{51} + O(\alpha)\, I_{52}$$

and

$$I_{52} = O(1) J_2\left[\sqrt{\rho^2-\alpha^2\tau^2}\right]\left\{\int_0^{\sin^{-1}\frac{\alpha\tau_1}{\rho}} d\phi \sin^2\phi \left[\frac{\sqrt{\eta^2-\frac{\rho^2}{\alpha^2}\sin^2\phi}}{2\frac{\rho^2}{\alpha^2}\sin^2\phi\,\eta} + \frac{\alpha^3\cos^{-1}\frac{\rho\sin\phi}{\alpha\eta}}{\rho^3\sin^3\phi}\right]_{\tau_1}^{\tau}\right.$$

$$\left. + \int_{\sin^{-1}\frac{\alpha\tau_1}{\rho}}^{\sin^{-1}\frac{\alpha\tau}{\rho}} \sin^2\phi \left[\frac{\alpha^2\sqrt{\eta^2-\frac{\rho^2}{\alpha^2}\sin^2\phi}}{2\rho^2\sin^2\phi} + \frac{\alpha^3\cos^{-1}\frac{\rho\sin\phi}{\alpha\eta}}{\rho^3\sin^3\phi}\right]_{\tau_1}^{\tau} d\phi \right\}$$

By separate consideration for $\rho \leq \alpha\tau_2$ and $\rho \geq \alpha\tau_2$, it can be shown that

$$O(\alpha) I_{52} < \sqrt{\alpha}\, M_1 \alpha^3 \tilde{\Omega}_0(\rho) \ .$$

Finally, note that

$$I_{51} + I_{41} = O(\alpha^3) \int_{\alpha\tau_1}^{\alpha\tau} \int_0^{\sin^{-1}\frac{\alpha}{\rho}} \frac{\xi \sin^2\phi}{\sqrt{\xi^2-\rho^2\sin^2\phi}} J_2[\rho\cos\phi] \frac{d\xi}{\xi^3}$$

$$= O(\alpha^3) \frac{J_2(\rho)}{\rho^3} \frac{\alpha^3}{\alpha^2\tau_1^2}$$

$$< \sqrt{\alpha}\, M_1 \alpha^3 \tilde{\Omega}_0(\rho)$$

Therefore,

$$|I_4 + I_5| < \sqrt{\alpha}\, M_1 \alpha^3 \tilde{\Omega}_0(\rho) \qquad \text{(VI.4)}$$

Summarizing (VI.1), (VI.2), (VI.3), and (VI.4) gives

$$\left|E\left(\frac{\rho}{\alpha},\alpha\right)\right| < 5\sqrt{\alpha}\, M_1\, \alpha^3 \tilde{\Omega}_0(\rho)$$

from which it follows that

$$\left|E\left(\frac{\rho}{\alpha},\alpha\right)\right| < \sqrt{\alpha}\, M \cdot \Omega\left(\frac{\rho}{\alpha},\alpha\right) \tag{VI.5}$$

(ii) In the inner region, $r < \tau$,

$$E(r,\alpha) = \hat{\omega}_0(r) - \Omega(r,\alpha) - \int_1^\infty K(r,\eta;\alpha) g(\eta,\alpha) d\eta$$

$$= \hat{\omega}_0(r) - \Omega(r,\alpha) - (I_6 + I_7)$$

where

$$I_6 = \int_1^\tau K(r,\eta;\alpha)\hat{\omega}_0(\eta) d\eta \ ,$$

and

$$I_7 = \alpha^2 \int_{\alpha\tau}^\infty K\left(r, \frac{\xi}{\alpha}; \alpha\right)\tilde{\omega}_0(\xi) d\xi \ .$$

Since $r < \alpha^{1/2}$, it is seen that

$$I_6 = \alpha \int_1^\tau \hat{K}_0(r,\eta)\hat{\omega}_0(\eta) d\eta + O(\alpha^2) \int_1^\tau \hat{K}_1(r,\eta)\hat{\omega}_0(\eta) d\eta$$

or

$$|I_6| < \alpha \int_1^\infty \hat{K}_0(r,\eta)\hat{\omega}_0(\eta) d\eta + O(\alpha^2) \int_1^\infty \hat{K}_1(r,\eta)\hat{\omega}_0(\eta) d\eta \ .$$

On account of the facts that as $r \to \infty$,

$$\hat{\Omega}_o(r) \to \frac{2}{3\pi r^3}$$

$$\int_1^\infty \hat{K}_o(r,\eta)\hat{\omega}_o(\eta)d\eta \to \frac{c_3}{r^2} ,$$

and

$$\int_1^\infty \hat{K}_1(r,\eta)\hat{\omega}_o(\eta)d\eta \to \frac{c_4}{r} ,$$

it may be concluded that

$$|I_6| < \sqrt{\alpha}\, M_1 \hat{\Omega}_o(r) \tag{VI.6}$$

And $I_7$ may be written as

$$I_7 = \alpha^2 \int_{\alpha\tau}^{\alpha\tau_3} K(r, \tfrac{\xi}{\alpha}; \alpha)\tilde{\omega}_o(\xi)d\xi + \alpha^2 \int_{\alpha\tau_3}^{\infty} K(r, \tfrac{\xi}{\alpha}; \alpha)\tilde{\omega}_o(\xi)d\xi$$

$$= I_{71} + I_{72}$$

where $\tau_3$ is taken to be $\alpha^{-3/5}$. Then for $I_{71}$ the kernel $K(r, \frac{\xi}{\alpha}; \alpha)$ and $\tilde{\omega}_o(\xi)$ may be simplified by noting $\alpha r \ll 1$, $\xi \ll 1$, and for $I_{72}$ the simplification is $\alpha r \ll \xi$. This is the justification of equation (4.17). As a result

$$I_{72} = O(\alpha^2)\frac{4\alpha}{\pi}\left[\frac{\pi}{2} - \frac{1}{r}\sqrt{1-\frac{1}{r^2}}\right]\int_{\alpha\tau_1}^{\infty} J_2[\xi]\tilde{\omega}_o(\xi)d\xi$$

$$= O(\alpha^3)\frac{1}{\alpha^2\tau_3^2} < \sqrt{\alpha}\, M_1 \hat{\Omega}_o(r)$$

And for $I_{71}$, the result is

$$|I_{71}| < O(\alpha^3) \int_{\alpha\tau}^{\alpha\tau_1} \tilde{\omega}_o(\xi)d\xi < \sqrt{\alpha}\, M_1 \hat{\Omega}_o(r) \ ,$$

which implies, together with the result for $I_{72}$,

$$|I_7| < 2\sqrt{\alpha}\, M_1 \hat{\Omega}_o(r) \ . \tag{VI.7}$$

From the expansion (4.24) for $\Omega(r,\alpha)$ it is seen that

$$|\hat{\omega}_o(r) - \Omega(r,\alpha)| < \sqrt{\alpha}\, M_1 \hat{\Omega}_o(r) \ . \tag{VI.8}$$

Summing up (VI.5), (VI.6) and (VI.7) gives

$$|E(r,\alpha)| < 4\sqrt{\alpha}\, M_1 \hat{\Omega}_o(r) \ , \qquad \text{for} \quad r < \tau,$$

and hence

$$|E(r,\alpha)| < \sqrt{\alpha}\, M\, \hat{\Omega}(r,\alpha) \qquad \text{for} \quad r < \tau. \tag{VI.9}$$

Combination of (VI.5) and (VI.9) implies

$$|E(r,\alpha)| < \sqrt{\alpha}\, M\, \Omega(r,\alpha) \qquad \text{for} \quad 1 \leq r < \infty \ ,$$

which is what is to be proved.

## REFERENCES


Abramowitz, M. (1953). J. Math. and Phys. 32, 188.

Baker, R.M.L., Jr. and A. G. Charwat (1958). Phys. Fluids 1, 73.

Bhatnagar, P.L., E.P. Gross and M. Krook (1954). Phys. Rev. 94, 511.

De Marcus, W.C. (1957). U.S. Atomic Energy Report K-1302, ORGDP.

Epstein, P.S. (1924). Phys. Rev. 23, 710.

Estermann, I. (1960). "Rarefied Gas Dynamics," ed. by F. Devienne, Academic Press.

Erdelyi, A. (1956). "Asymptotic Expansions," Dover Publication.

Gaede, W. (1913). Ann. Physik 41, 289.

Grad, H. (1959). NYO-2543, Courant Institute of Mathematical Sciences, New York University.

Grad, H. (1963). "Rarefied Gas Dynamics," ed. by J. A. Laurmann, Academic Press.

Gross, E.P. and E.A. Jackson (1959). Phys. Fluids 2, 432.

Knudsen, M. (1909). Ann. Physik 28, 75.

Liempmann, H.W., R. Narasimha, and M.T. Chahine (1962). Phys. Fluids 5, 1313.

Lunc, M. and J. Lubonski (1956). Arch Mech. Stosowanej (Warsaw) 8, 597.

Sirovich, L. (1960). NYO-9086, Courant Institute of Mathematical Sciences, New York University.

Stalder, J.R., G. Goodwin, and M.O. Creager (1951), NACA Report 1032.

Tsien, H.S. (1946). J. of Aero. Sciences 13, 653.

Waldmann, L. (1958), in "Handbuch der Physik," ed. S. Flügge, Springer Verlag.

Welander, P. (1954). Arkiv för Physik 7, 44.

Willis, D.R. (1958). Princeton Univ. Aero. Eng. Report 440.

Willis, D.R. (1961). "Rarefied Gas Dynamics," ed. by L. Talbot, Academic Press.

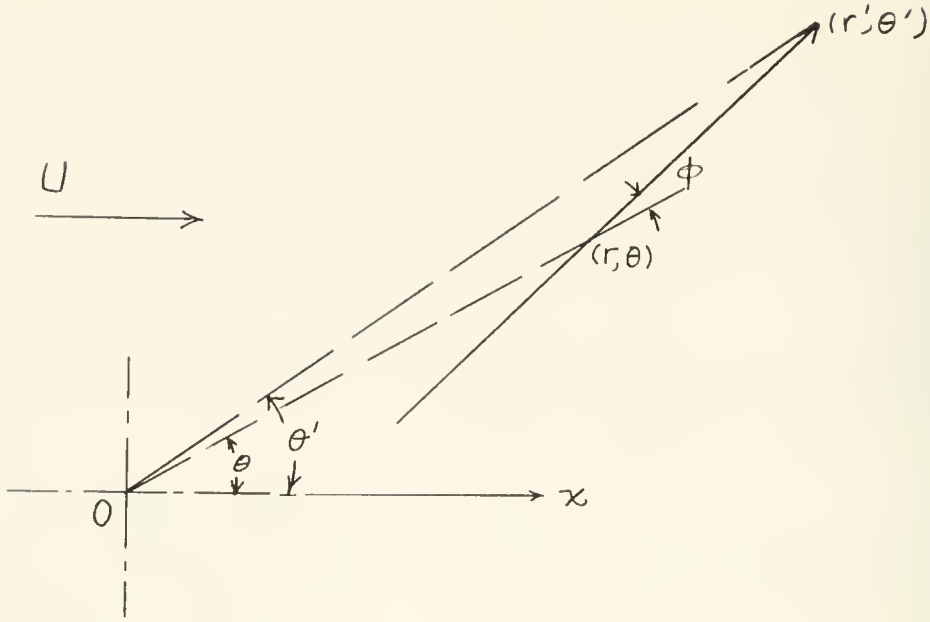


Fig. 1 A Molecular Trajectory

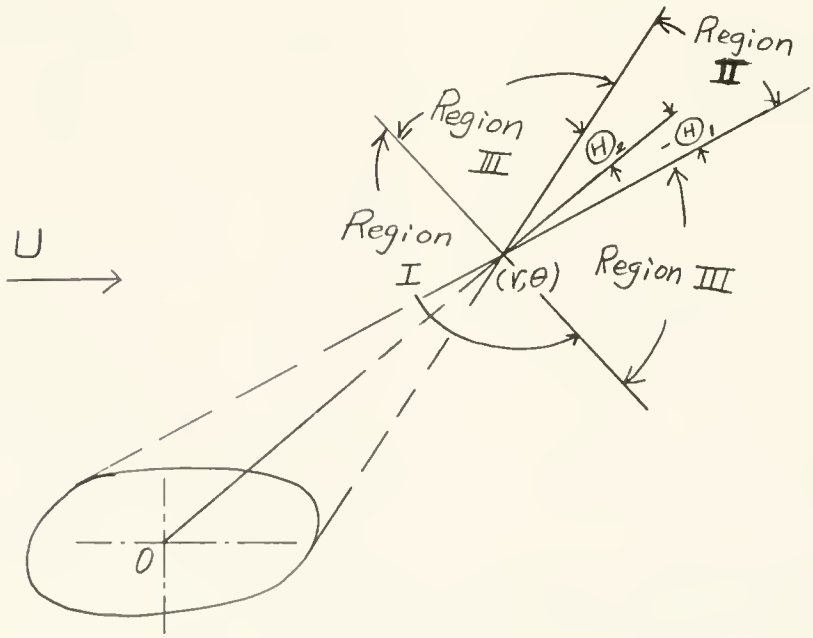


Fig. 2. The Regions

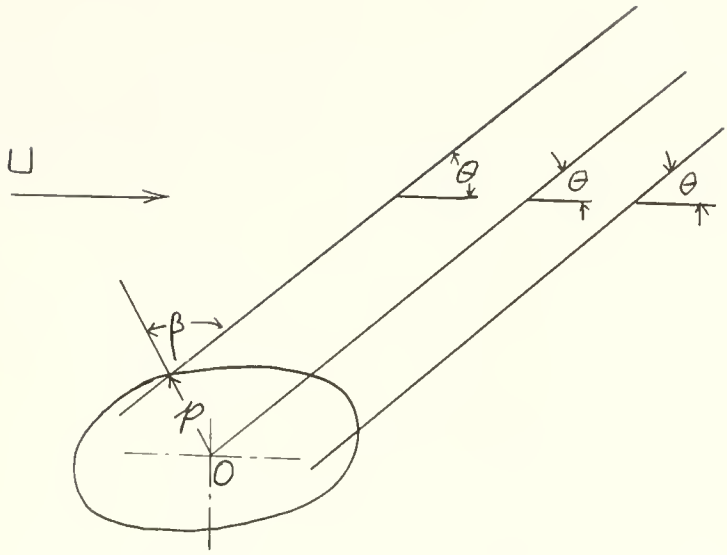


Fig. 3 The $(\beta, \theta)$ Coordinates

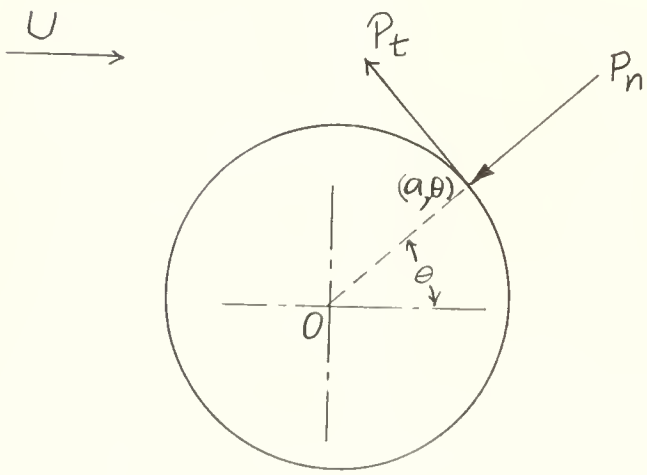


Fig. 4. Aerodynamic Forces

MAR 8 1965
DATE DUE

| | | | |
|---|---|---|---|
| '65 | | | |
| | | | |
| | | | |
| | | | |
| | | | |
| | | | |
| | | | |
| | | | |
| | | | |
| | | | |
| | | | |
| | | | |
| | | | |
| | | | |
| | | | |
| | | | |
| | | | |
| | | | |
| GAYLORD | | | PRINTED IN U.S.A. |

NYU
MF-
43 Pao

9297

A uniformly valid asymptotic
theory of rarified gas flows...

NYU
MF-
43 Pao

9297

AUTHOR
A uniformly valid asymptotic
TITLE
theory of rarified gas flows..

| DATE DUE | BORROWER'S NAME | ROOM NUMBER |
|---|---|---|
| '65 | L. Mendel | |
| APR 7 '65 | | |
| APR 21 '65 | | |
| | | |

N.Y.U. Courant Institute of
Mathematical Sciences
251 Mercer St.
New York 12, N. Y.